Series	Description	Size				Mounting		Configuration		Page
	DIN / ISO	¾	1	1¼	1½	SAE61	SAE62	2-port	3-port	
	Pressure valves, manual operation									
R5V	Pressure relief function	•	•	•	•	•	•	•	•	9-2
R5U	Pressure unloading function	•	•	•	•	•			•	9-8
R5S	Pressure sequence function	•	•	•		•			•	9-13
R5R	Pressure reducing function	•	•	•		•		•		9-17
	Pressure valves, proportional operation									
R5V*P2	Pressure relief function	•	•	•	•	•	•	•	•	9-23
R5R*P2	Pressure reducing function	•	•	•		•		•		9-29
	Directional seat valves									
D5S		•	•	•	•	•		•	•	9-33
	Flow valves									
F5C	Throttle valves, proportional	•	•	•		•		•		9-47
R5A	2-way pressure compensator	•	•	•		•		•		9-51
R5P	3-way pressure compensator	•	•	•		•			•	9-53
	Check valves									
C5V	Direct operated	•	•	•	•	•	•	•		9-60
C5P	Pilot and direct operated	•	•	•		•		•		9-64
	Accessories									
	Bolt kits, flanges, plugs									9-68

9

Pilot operated pressure relief valves series R5V have a similar design to the subplate mounted R4V series. The SAE flanges allow to mount the valves directly on the outlet flanges of pumps or inlet flanges of actuators to achieve a very compact design.

Valves with SAE flanges can also be bolted together to combine functions without the need of a manifold block.

Features

- Pilot operated with manual adjustment
- R5V with 2-port body
  - 3 sizes (SAE ¾", 1", 1¼")
  - SAE61 flange
- R5V with 3-port body
  - 4 sizes (SAE ¾", 1", 1¼", 1½")
  - SAE61 and SAE62 flange
- 3 pressure stages
- 3 adjustment modes
  - Hand knob
  - Acorn nut with lead seal
  - Cylinder lock
- With optional vent function

R5V 2-port

R5V 3-port

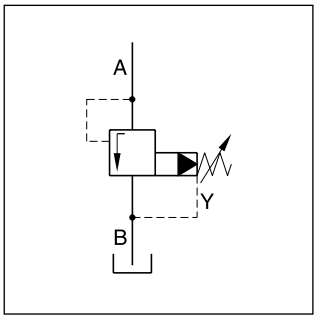

R5V 2-port

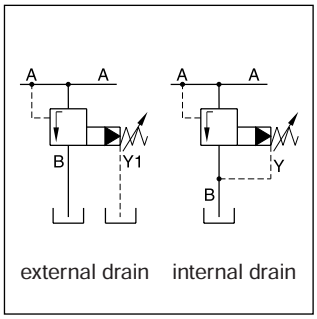

R5V 3-port

R5V 2-port

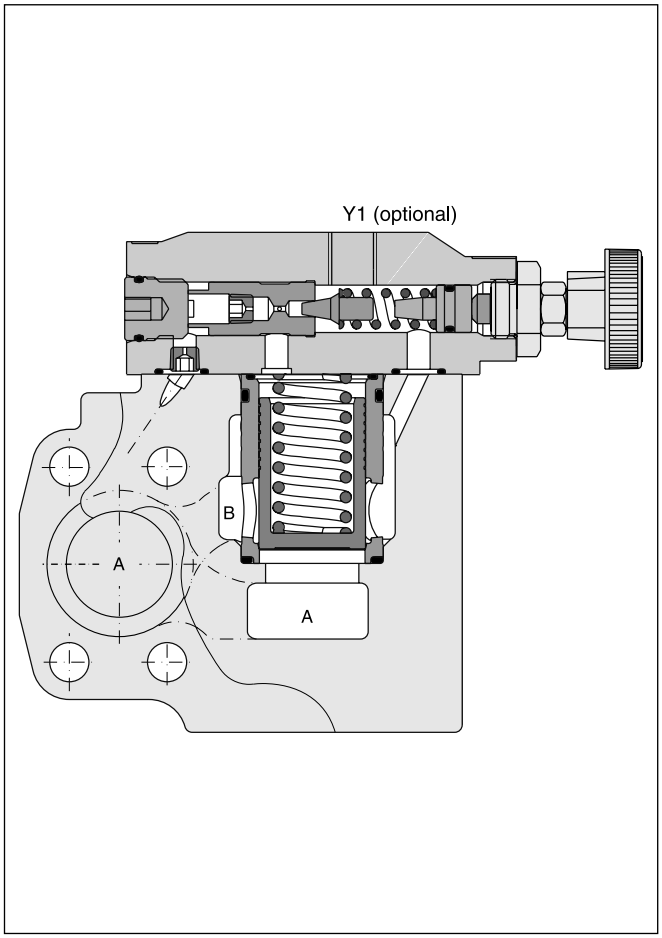

R5V 3-port

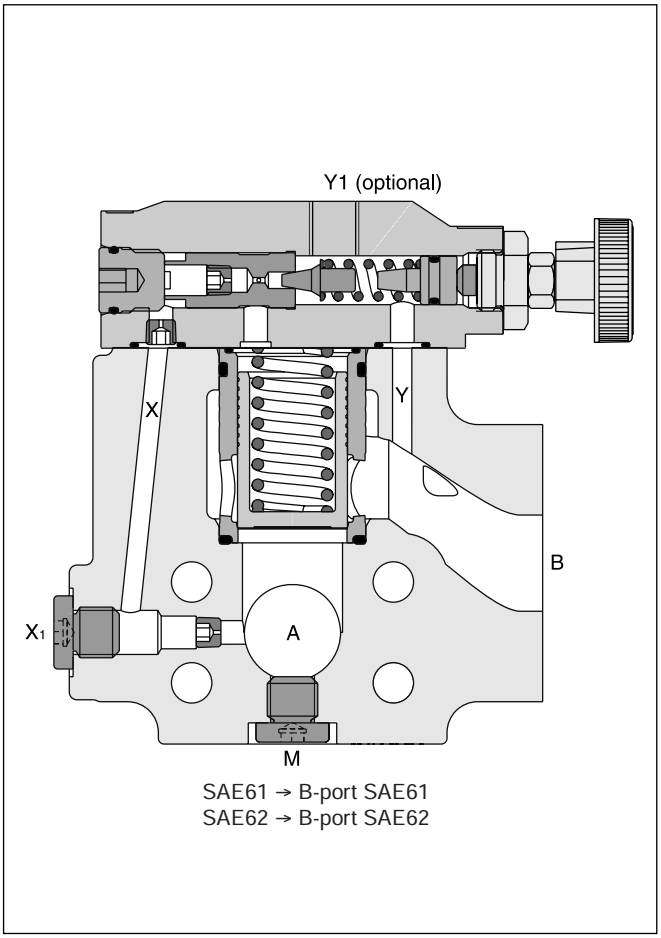

Ordering Code

R5V	☐	–	☐	☐	☐	☐	☐	☐	☐	A	☐	☐	☐
Pressure relief valve	Nominal size		SAE Interface	Pilot ports	Pressure stages	Adjust-ment	Pilot oil	Switching type	Solenoid voltage	Design	Seals	Design series (not required for ordering)	Options

Code	Port size
06	SAE ¾"
08	SAE 1"
10	SAE 1¼"
12 [1]	SAE 1½"

SAE61		
Code	Size	Max. pressure [bar]
3	12	210
4	10	280
5	06/08	350
SAE62		
Code	Size	Max. pressure [bar]
6 [1]	06/08/10/12	350

2-port body	
Code	pilot ports
7	Y1 = G ¼" [2]
3-port body	
Code	pilot ports
9	Y1 [2], X1, M = G ¼"

Code	Pressure stages
1	up to 105 bar
3	up to 210 bar
5 [3]	up to 350 bar

Code	Adjustment
1	Hand knob
3	Acorn nut with lead seal
4	Cylinder lock

Code	Options
008 [5]	Vent function with slow unloading
070	Metric 3-port body for R5V10 SAE62: Pressure ports (A): SAE62 with 15 mm through holes (for M14), Tank port: SAE61 (M12)
152 [6]	3-port body with metric threads

Code	Seals
1	NBR
5	FPM

Code	Solenoid voltage
omit	Standard w/o vent function
G0R	12 V=
G0Q	24 V=
GAR [4]	98 V=
GAG [4]	205 V=
W30	110 V / 50 Hz 120 V / 60 Hz
W31	230 V / 50 Hz 240 V / 60 Hz

Code	Switching type
omit	Standard w/o vent function
09	Solenoid not activ. unpress. circulation
11	Solenoid activated unpress. circulation

Pilot oil	
Code	Drain line
2	internal
6	external from Y1-port

Further options on request

[1] Only R5V 3-port
[2] Y1 only available at external drain (pilot oil code 6)
[3] R5V10-4*5 up to 280 bar
[4] To be used in combination with rectifier plugs at 120 VAC / 230 VAC power supply
[5] Only for vent valve function code 09
[6] R5V08 SAE62: Tank port SAE61 (M10)

Technical data

General							
Size		06 (¾")	08 (1")	10 (1¼")	12 (1½")		
Mounting		Flanged according to SAE61 and SAE62					
Mounting position		unrestricted					
Ambient temperature	[°C]	-20...+50					
$MTTF_D$ value	[years]	75					
Weight R5V 2port	[kg]	4.0	4.6	5.9	—		
R5V 3port	[kg]	3.6	4.6	5.2	8.0		
Hydraulic							
Max. operating pressure	[bar]						
SAE61 Ports A, B		350	350	280	210		
Port Y1		30	30	30	30		
SAE62 Ports A, B		350	350	350	350		
Port Y1		30	30	30	30		
Pressure stages	[bar]	105, 210, 350					
Nominal flow	[l/min]	90	300	600	600		
Fluid		Hydraulic oil according to DIN 51524...51525					
Fluid temperature	[°C]	-20...+80					
Viscosity, permitted	[cSt] / [mm²/s]	10...650					
recommended	[cSt] / [mm²/s]	30					
Filtration		ISO 4406 (1999); 18/16/13					
Electrical (solenoid)							
Duty ratio		100 % ED; CAUTION: coil temperature up to 150 °C possible					
Protection class		IP65 in accordance with EN 60529 (with correctly mounted plug-in connector)					
	Code	G0R	G0Q	GAR	GAG	W30	W31
Supply voltage	[V] [V]	12 V =	24 V =	98 V =	205 V =	110 at 50 Hz 120 at 60 Hz	230 at 50 Hz 240 at 60 Hz
Tolerance supply voltage	[%]	±10	±10	±10	±10	±5	±5
Current consumption hold	[A]	2.72	1.29	0.33	0.13	0.6 / 0.55	0.3 / 0.27
in rush	[A]	2.72	1.29	0.33	0.13	2.5 / 2.4	1.25 / 1.2
Power consumption hold	[W]	32.7	31	31.9	28.2	70/70 VA	70/70 VA
in rush	[W]	32.7	31	31.9	28.2	280/290 VA	280/290 VA
Solenoid connection		Energized / De-energized AC: 20/18 , DC: 46/27					
Wiring min.	[mm²]	3 x 1.5 recommended					
Wiring length max.	[m]	50 recommended					

9

p/Q performance curve

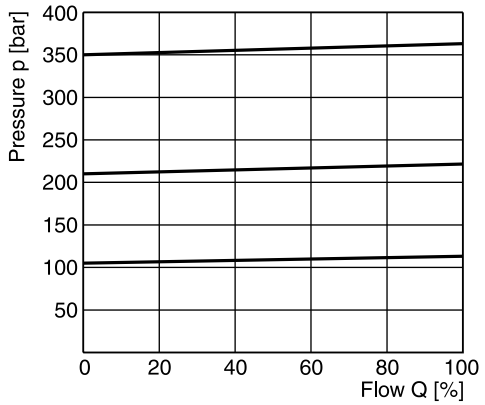

Minimum pressure curve

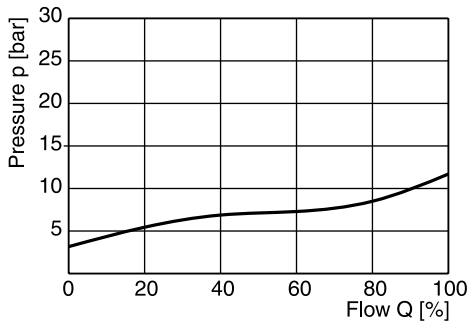

All characteristic curves measured with HLP46 at 50 °C.

The performance curves are measured with external drain.
For internal drain the tank pressure has to be added to curve.

R5V UK.INDD CM 24.07.13

Dimensions R5V 2-port

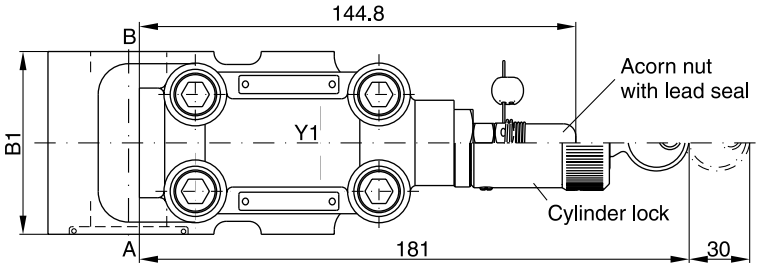

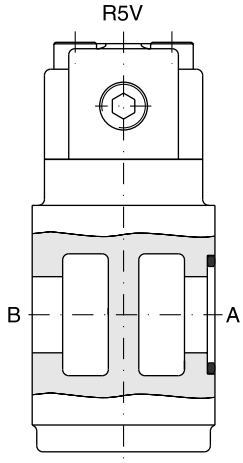

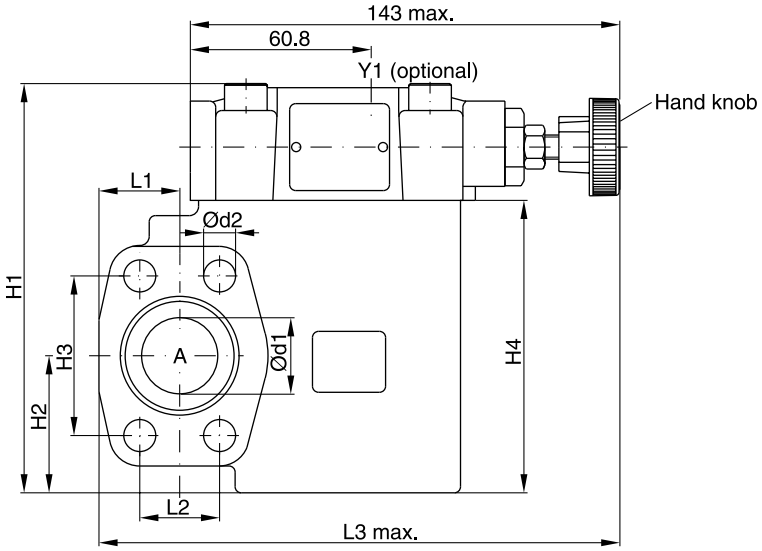

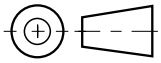

9

SAE61

Seal kits		
NG	NBR	FPM
06	S16-91850-0	S16-91850-5
08	S16-91851-0	S16-91851-5
10	S16-91852-0	S16-91852-5

NG	B1	H1	H2	H3	H4	L1	L2	L3	d1	d2
06	60	131.6	37	47.6	90	24.6	22.2	152	19	10.5
08	60	137.6	45	52.4	96	26.5	26.2	171	25	10.5
10	75	150.6	48	58.7	109	34.0	30.2	179	32	12.5

Port	Function	Port size		
		R5V06	R5V08	R5V10
A	Pressure	¾" SAE61	1" SAE61	1¼" SAE61
B	Tank	¾" SAE61	1" SAE61	1¼" SAE61
Y1	External drain	G¼"	G¼"	G¼"

Dimensions R5V 3-port

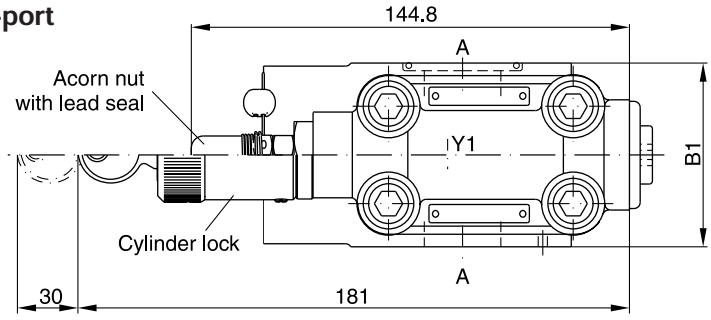

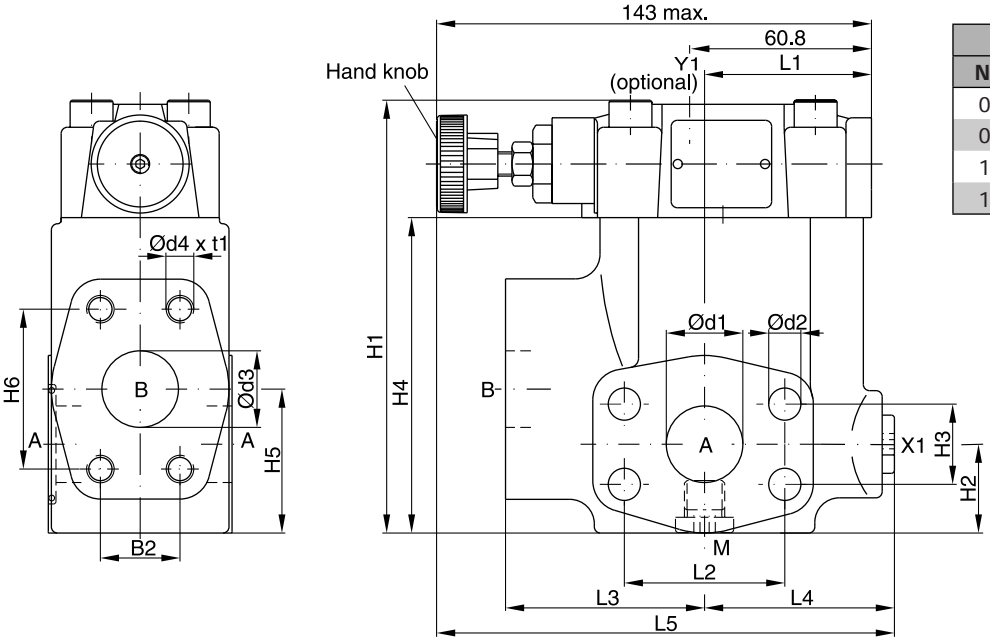

Seal kits		
NG	NBR	FPM
06	S16-91850-0	S16-91850-5
08	S16-91851-0	S16-91851-5
10	S16-91852-0	S16-91852-5
12	S26-27421-0	S26-27421-5

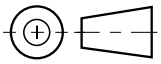

9

SAE61

NG	B1	B2	H1	H2	H3	H4	H5	H6	L1	L2	L3	L4	L5	d1	d2	d3	d4 (option 152)	t1
06	60	22.2	119	29.5	22.2	81	41.6	47.6	50.3	47.6	63	56	152	19	10.5	19	3/8"-16 UNC (M10)	20
08	60	26.2	141	30.5	26.2	103	47	52.4	55.8	52.4	65	58	149	25	10.5	25	3/8"-16 UNC (M10)	23
10	75	30.2	151	37.5	30.2	113	64	58.7	57.8	58.7	61	62	150.5	32	12.5	32	7/16"-14 UNC (M12)	22
12	80	35.7	178	35.5	35.7	140	73	69.8	37.3	69.8	92.5	55.2	171.2	38	13.5	38	1/2"-13 UNC (M12)	27

SAE62

NG	B1	B2	H1	H2	H3	H4	H5	H6	L1	L2	L3	L4	L5	d1	d2	d3	d4 (option 152)	t1
06	60	23.8	119	29.5	23.8	81	41.6	50.8	50.3	50.8	63	56	152	19	10.5	19	3/8"-16 UNF (M10)	20
08	60	27.8	141	30.5	27.8	103	47	57.2	55.8	57.2	65	58	149	25	12.5	25	7/16"-14 UNC (M10)[1]	22
10	75	31.8	151	37.5	31.8	113	64	66.7	57.8	66.7	61	62	150.5	32	13.5	32	1/2"-13 UNC (M12)	24
12	80	36.5	178	35.5	36.5	140	73	79.4	37.3	79.4	92.5	55.2	171.2	38	17	38	5/8"-11 UNC (M16)	33

Port	Function	Port size			
		R5V06	R5V08	R5V10	R5V12
A (2)	Pressure	¾" SAE61/62	1" SAE61/62	1¼" SAE61/62	1½" SAE61/62
B	Tank	¾" SAE61/62	1" SAE61/62	1¼" SAE61/62	1½" SAE61/62
X1	External pilot port [2]	G¼"	G¼"	G¼"	G¼"
Y1	External drain	G¼"	G¼"	G¼"	G¼"
M	Pressure gauge	G¼"	G¼"	G¼"	G¼"

[1] T-port SAE61
[2] Closed when supplied

R5V UK.INDD CM 24.07.13

Dimensions R5V with vent function

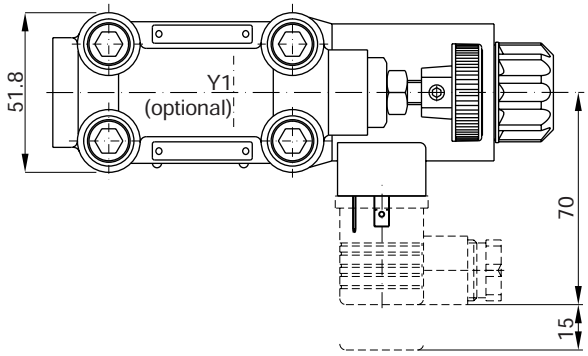

Seal kits	
NBR	**FPM**
DC solenoid	
S56-40609-0	S56-40609-5
AC solenoid	
S26-35237-0	S26-35237-5

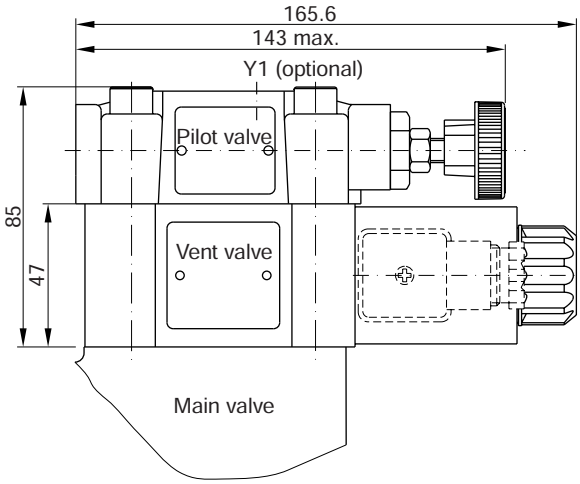

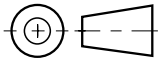

9

	R5V 2-port		R5V 3-port	
Code	**Internal drain**	**External drain**	**Internal drain**	**External drain**
11	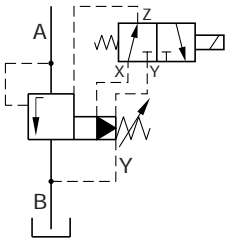	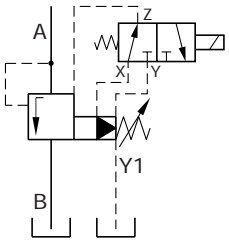	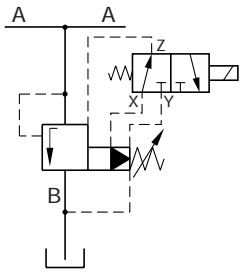	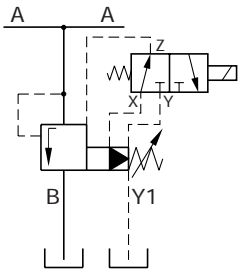
09	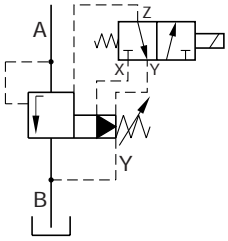	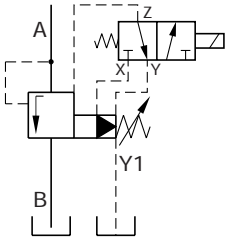	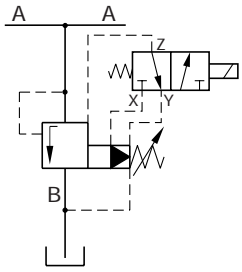	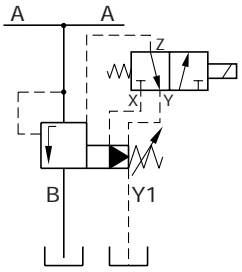

Pilot operated pressure unloading valves series R5U have a similar design to the subplate mounted R4U series. The SAE flanges allow to mount the valve directly on the outlet flanges of pumps.

A typical application is the unloading of a pump in an accumulator circuit. The combination of an R5U, C5V and R5V on a double pump generates a high pressure / low pressure pump system without the need of a manifold block or piping between the valves.

Features

- Pilot operated unloading valve
- 3-port body with SAE61 flange
- 4 sizes (SAE ¾", 1", 1¼", 1½")
- 3 pressure stages
- 3 adjustment modes
  - Hand knob
  - Acorn nut with lead seal
  - Cylinder lock
- With optional vent function

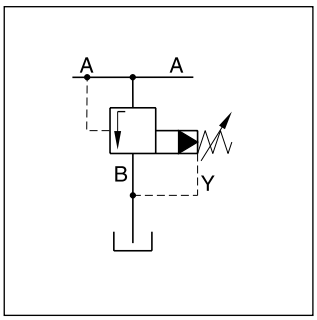

R5U 3-port internal drain

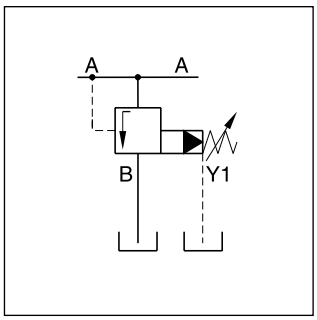

R5U 3-port external drain

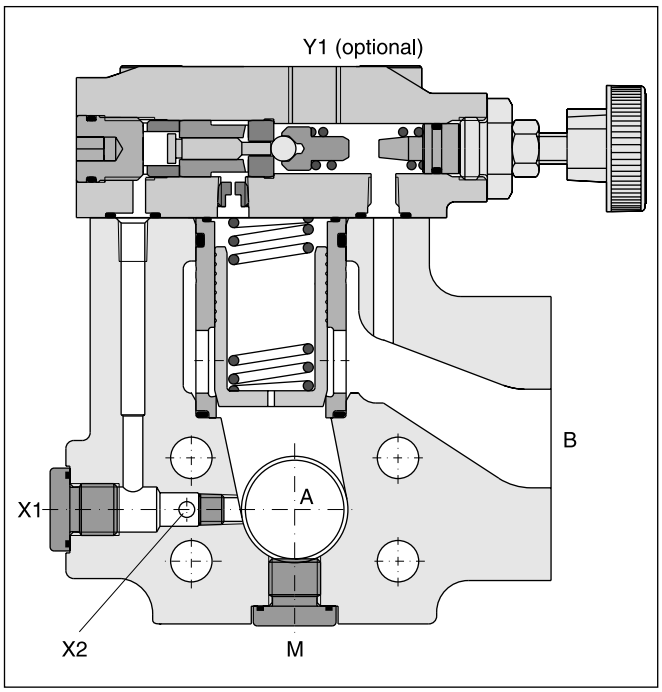

High pressure / low pressure system

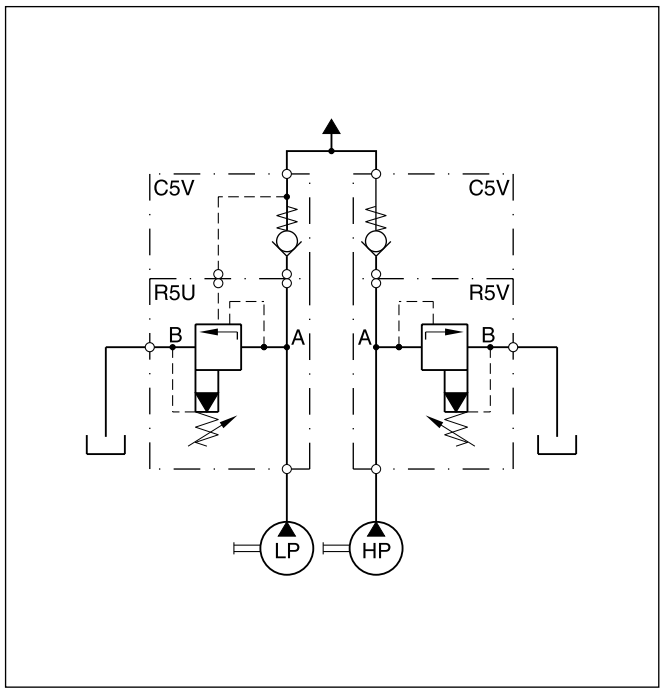

Ordering Code

R5U	☐	–	☐	9	☐	☐	☐	☐	☐	A	☐	☐
Pressure unloading valve	Nominal size		SAE61 interface	3-port body M, Y1, X = G¼"	Pressure stages	Adjust-ment	Pilot oil	Switching type	Solenoid voltage	Design series	Seals	Options

Code	Port size
06	SAE ¾"
08	SAE 1"
10	SAE 1¼"
12	SAE 1½"

SAE61		
Code	Size	Max. pressure [bar]
3	12	210
4	10	280
5	06/08	350

Code	Pressure stages [bar]	Pressure differential
1	up to 105	28 %
3	up to 210	28 %
5 [1]	up to 350	15 %

Code	Adjustment
1	Hand knob
3	Acorn nut with lead seal
4	Cylinder lock

Code	Options
008 [3]	Vent function with slow unloading
152	3-port body with metric threads

Code	Seals
1	NBR
5	FPM

Code	Solenoid voltage
omit	Standard w/o vent function
G0R	12 V=
G0Q	24 V=
GAR [2]	98 V=
GAG [2]	205 V=
W30	110 V / 50 Hz 120 V / 60 Hz
W31	230 V / 50 Hz 240 V / 60 Hz

Code	Switching type
omit	Standard w/o vent function
09	Solenoid not activ. unpress. circulation
11	Solenoid activated unpress. circulation

Pilot oil		
Code	Pilot	Drain
4	External via port X1 or X2	External
5	External via port X1 or X2	Internal

Further options on request

[1] R5U10-495 up to 280 bar
[2] To be used in combination with rectifier plugs at 120 VAC / 230 VAC power supply.
[3] Only for vent valve function code 09

Technical data

General							
Size		06 (¾")	08 (1")	10 (1¼")	12 (1½")		
Mounting		Flanged according to SAE61					
Mounting position		unrestricted					
Ambient temperature	[°C]	-20...+50					
$MTTF_D$ value	[years]	75					
Weight	[kg]	3.6	4.6	5.2	8.0		
Hydraulic							
Max. operating pressure	[bar]						
Ports A, B, X		350	350	280	210		
Ports Y, Y1		30	30	30	30		
Pressure stages	[bar]	105, 210, 350					
Nominal flow	[l/min]	90	300	600	600		
Fluid		Hydraulic oil according to DIN 51524...51525					
Fluid temperature	[°C]	-20...+80					
Viscosity permitted	[cSt] / [mm²/s]	10...650					
Viscosity recommended	[cSt] / [mm²/s]	30					
Filtration		ISO 4406 (1999); 18/16/13					
Electrical							
Duty ratio		100 % ED; CAUTION: coil temperature up to 150 °C possible					
Protection class		IP65 in accordance with EN 60529 (with correctly mounted plug-in connector)					
	Code	G0R	G0Q	GAR	GAG	W30	W31
Supply voltage	[V] [V]	12 V =	24 V =	98 V =	205 V =	110 at 50 Hz 120 at 60 Hz	230 at 50 Hz 240 at 60 Hz
Tolerance supply voltage	[%]	±10	±10	±10	±10	±5	±5
Current consumption hold	[A]	2.72	1.29	0.33	0.13	0.6 / 0.55	0.3 / 0.27
in rush	[A]	2.72	1.29	0.33	0.13	2.5 / 2.4	1.25 / 1.2
Power consumption hold	[W]	32.7	31	31.9	28.2	70/70 VA	70/70 VA
in rush	[W]	32.7	31	31.9	28.2	280/290 VA	280/290 VA
Solenoid connection		Connector as per EN175301-803, solenoid identification as per ISO 9461					
Wiring min.	[mm²]	3 x 1.5 recommended					
Wiring length max.	[m]	50 recommended					

9

p/Q performance curve

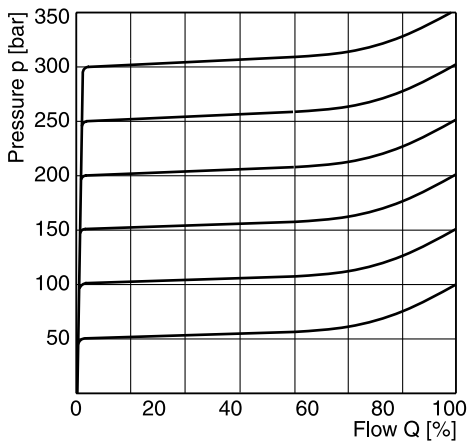

Minimum pressure curve

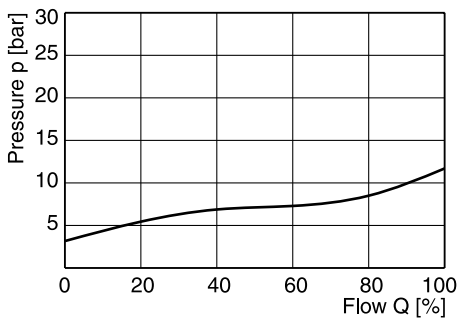

All characteristic curves measured with HLP46 at 50 °C.

The performance curves are measured with external drain.
For internal drain the tank pressure has to be added to curve.

R5U UK.INDD CM 18.07.13

Dimensions R5U

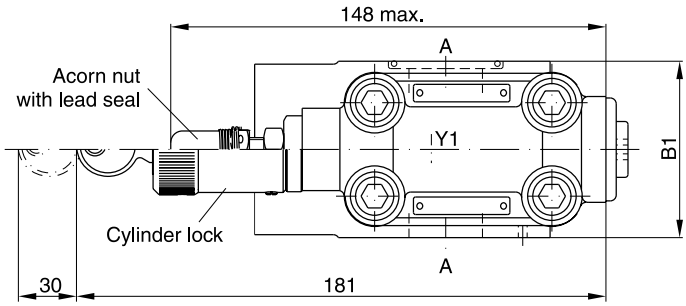

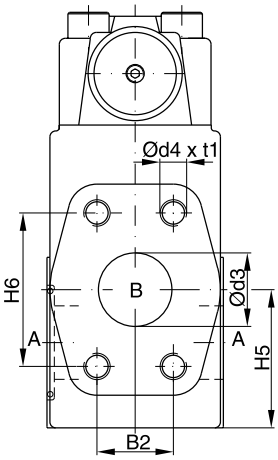

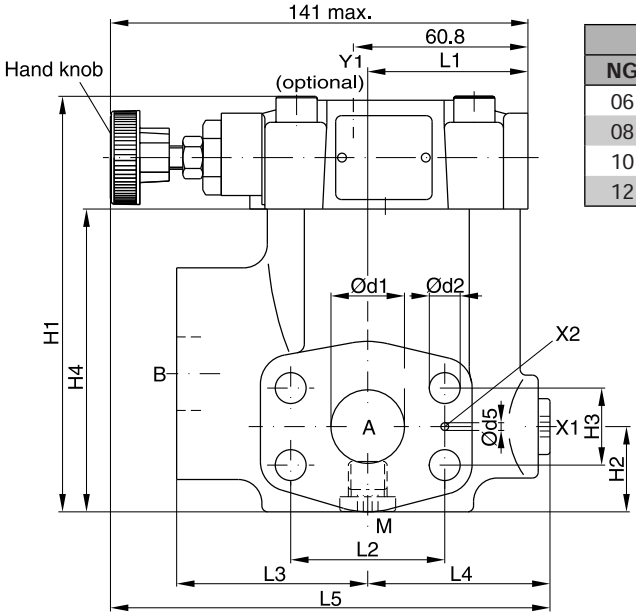

Seal kits		
NG	**NBR**	**FPM**
06	S16-91850-0	S16-91850-5
08	S16-91851-0	S16-91851-5
10	S16-91852-0	S16-91852-5
12	S26-27421-0	S26-27421-5

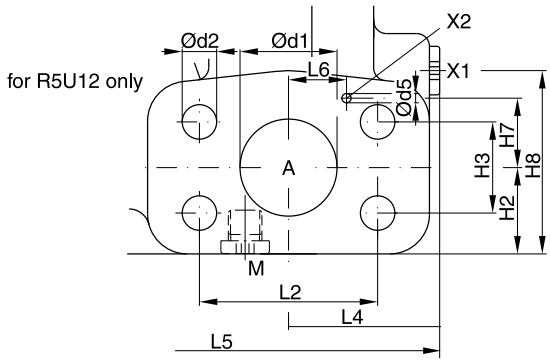

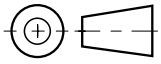

NG	B1	B2	H1	H2	H3	H4	H5	H6	L1	L2	L3	L4	L5	d1	d2	d3	d4	t1	d5	L6	H7	H8
06	60	22.2	119	29.5	22.2	81	41.6	47.6	50.3	47.6	63	56	152	19	10.5	19	3/8"-16 UNC	20	3.0	–	–	–
08	60	26.2	141	30.5	26.2	103	47	52.4	55.8	52.4	65	58	149	25	10.5	25	3/8"-16 UNC	23	3.0	–	–	–
10	75	30.2	151	37.5	30.2	113	64	58.7	57.8	58.7	61	62	150.5	32	12.5	32	7/16"-14 UNC	22	3.0	–	–	–
12	80	35.7	178	35.5	35.7	140	73	69.8	37.3	69.8	92.5	55.2	171.2	38	13.5	38	1/2"-13 UNC	27	3.0	22.4	27.2	73

Port	Function	Port size			
		R5U06	**R5U08**	**R5U10**	**R5U12**
A (2)	Pressure	¾" SAE61	1" SAE61	1¼" SAE61	1½" SAE61
B	Tank	¾" SAE61	1" SAE61	1¼" SAE61	1½" SAE61
X1	External pilot port [1]	G¼"	G¼"	G¼"	G¼"
Y1	External drain	G¼"	G¼"	G¼"	G¼"
M	Pressure gauge	G¼"	G¼"	G¼"	G¼"

[1] Closed when supplied

R5U UK.INDD CM 18.07.13

Dimensions R5U with vent function

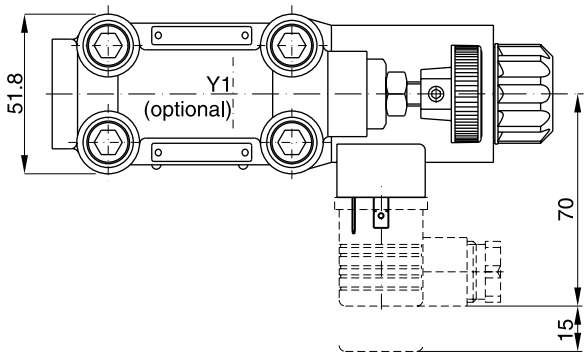

Seal kits	
NBR	**FPM**
DC solenoid	
S56-40609-0	S56-40609-5
AC solenoid	
S26-35237-0	S26-35237-5

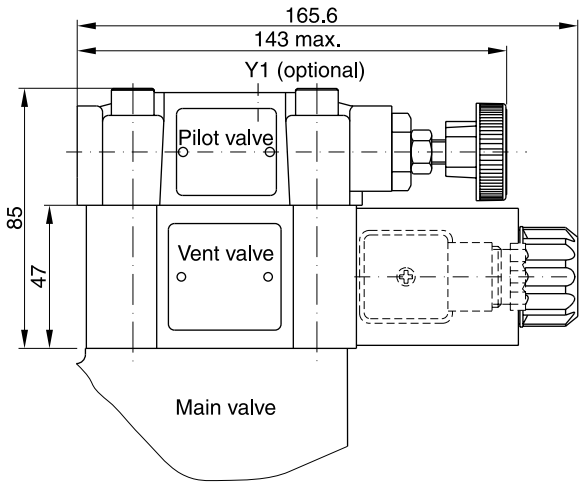

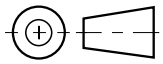

9

Code	Internal drain	External drain
11	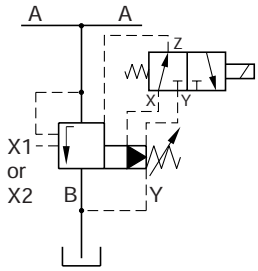	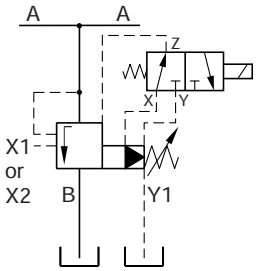
09	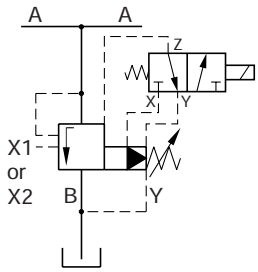	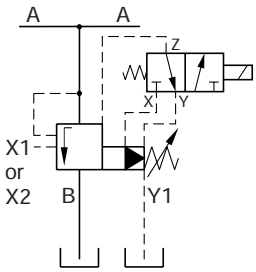

Pilot operated sequence valves series R5S have a similar design to the subplate mounted R4S series. The SAE flanges allow to mount the valve directly on the inlet flanges of actuators or outlet flanges of pumps to achieve a very compact design.

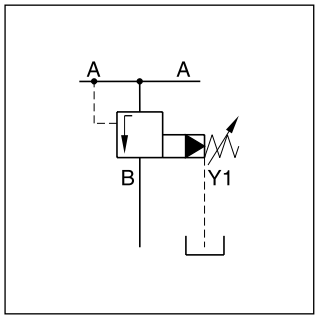

Features

- Pilot operated with manual adjustment
- 3-port body with SAE61 flange
- 3 sizes (SAE ¾", 1", 1¼")
- 3 pressure stages
- 2 adjustment modes
  - Hand knob
  - Acorn nut with lead seal
- Optional with vent function (on request)

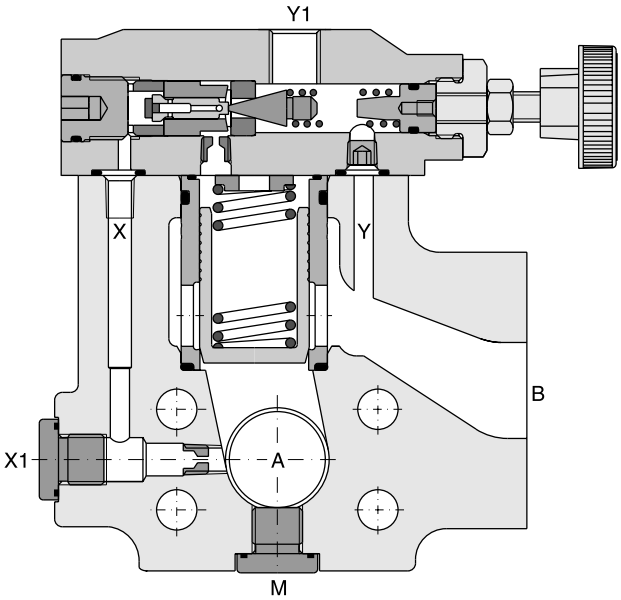

Ordering code

R5S	☐	–	☐	9	☐	☐	6	A	☐	152
Pressure sequence valve	Nominal size		SAE61 interface	3-port body (Y1, M = G¼")	Pressure stages	Adjust-ment	External drain from Y1 port	Design series	Seals	3-port body with metric threads

Code	Port size
06	SAE ¾"
08	SAE 1"
10	SAE 1¼"

SAE 61		
Code	Size	Max. pressure [bar]
4	10	280
5	06/08	350

Code	Pressure stages
1	up to 105 bar
3	up to 210 bar
5 [1)]	up to 350 bar

Code	Seals
1	NBR
5	FPM

Code	Adjustment
1	Hand knob
3	Acorn nut with lead seal

Further options on request

[1)] R5S10-495 up to 280 bar

9

Technical Data

General				
Size		06 (¾")	08 (1")	10 (1¼")
Mounting		Flanged according to SAE61		
Mounting position		unrestricted		
Ambient temperature	[°C]	-20...+50		
$MTTF_D$ value	[years]	75		
Weight	[kg]	3.6	4.6	5.2
Hydraulic				
Max. operating pressure	[bar]			
Ports A, B		350	350	280
Ports Y, Y1		30	30	30
Pressure stages	[bar]	105, 210, 350		
Nominal flow	[l/min]	90	300	600
Fluid		Hydraulic oil according to DIN 51524...51525		
Fluid temperature	[°C]	-20...+80		
Viscosity permitted	[cSt] / [mm^2/s]	10...650		
Viscosity recommended	[cSt] / [mm^2/s]	30		
Filtration		ISO 4406 (1999); 18/16/13		

Typical pressure characteristics at closing point

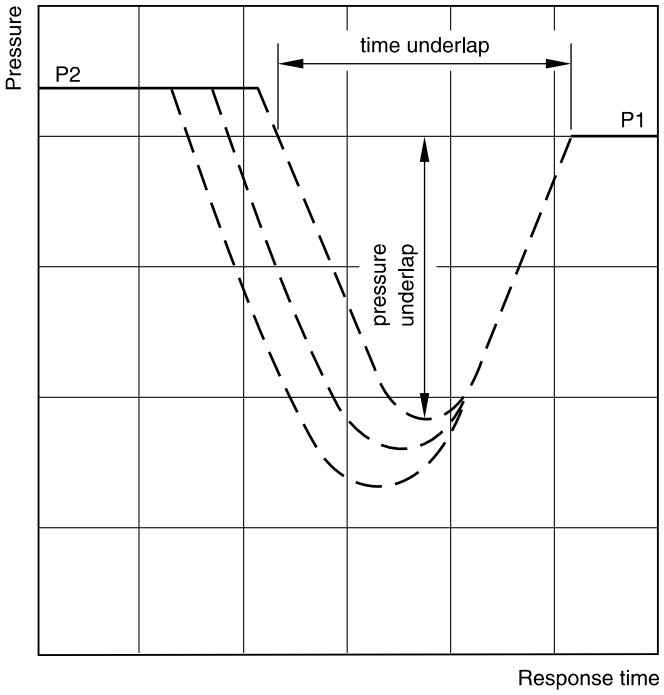

P1 = setting pressure
P2 = operating pressure

Time and pressure underlap depend on the characteristics of the specific system.

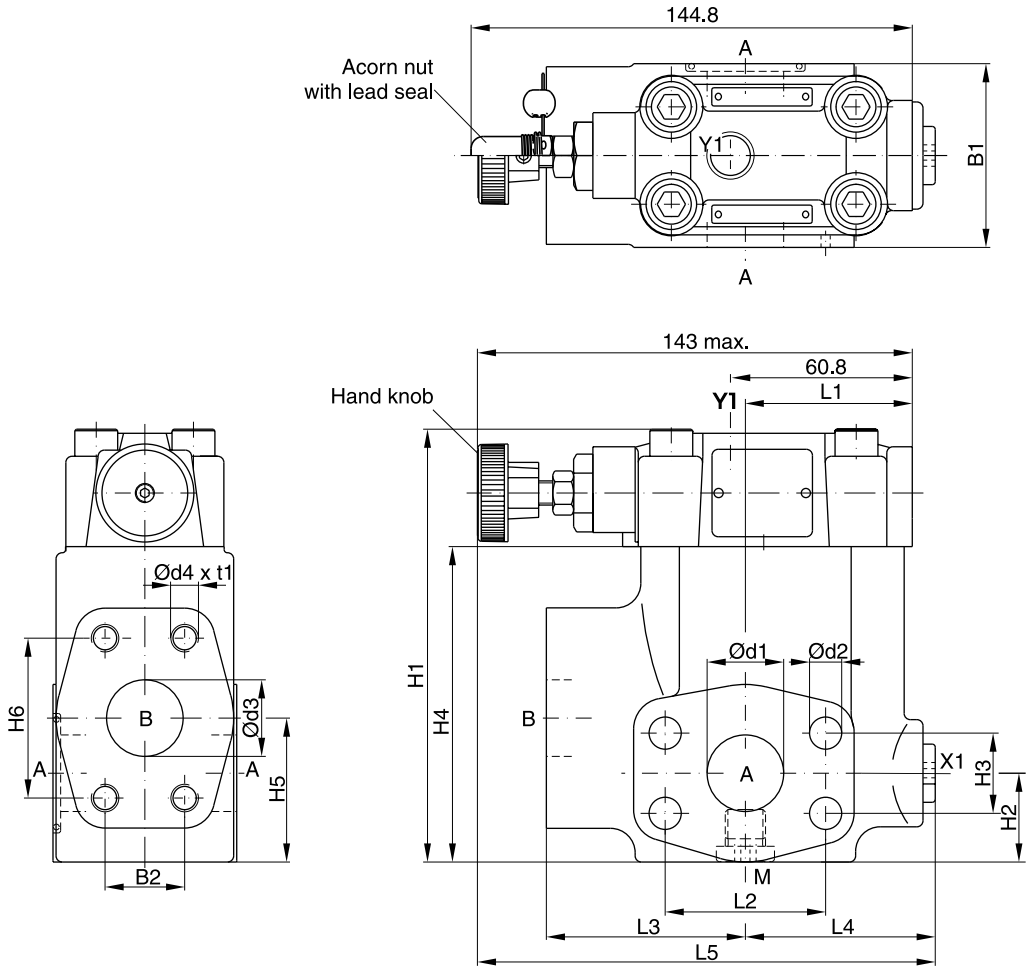

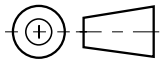

9

SAE61

Seal kits		
NG	NBR	FPM
06	S16-91850-0	S16-91850-5
08	S16-91851-0	S16-91851-5
10	S16-91852-0	S16-91852-5

NG	B1	B2	H1	H2	H3	H4	H5	H6	L1	L2	L3	L4	L5	d1	d2	d3	d4 (option 152)	t1
06	60	22.2	119	29.5	22.2	81	41.6	47.6	50.3	47.6	63	56	152	19	10.5	19	3/8"-16 UNC (M10)	20
08	60	26.2	141	30.5	26.2	103	47	52.4	55.8	52.4	65	58	149	25	10.5	25	3/8"-16 UNC (M10)	23
10	75	30.2	151	37.5	30.2	113	64	58.7	57.8	58.7	61	62	150.5	32	12.5	32	7/16"-14 UNC (M12)	22

Port	Function	Port size		
		R5S06	R5S08	R5S10
A (2)	Pressure	¾" SAE61	1" SAE61	1¼" SAE61
B	Secondary port	¾" SAE61	1" SAE61	1¼" SAE61
X1	External pilot port [1]	G¼"	G¼"	G¼"
Y1	External drain	G¼"	G¼"	G¼"
M	Pressure gauge	G¼"	G¼"	G¼"

[1] Closed when supplied

R5S UK.INDD CM 18.07.13

Pilot operated pressure reducing valves series R5R have a similar design as the subplate mounted R4R series. The SAE flanges allow to mount the valves directly on the inlet flanges of actuators to achieve a very compact design.

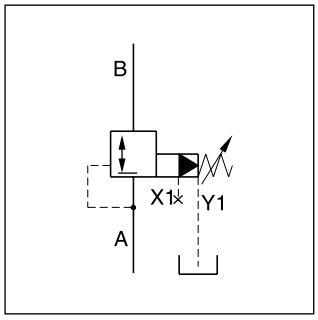

Features

- Pilot operated with manual adjustment
- Normally closed to avoid unintended motion
- 2-port body with SAE61 flange
- 3 sizes (SAE ¾", 1", 1¼")
- 3 pressure stages
- 3 adjustment modes
  - Hand knob
  - Acorn nut with lead seal
  - Cylinder lock
- With optional vent function
- Flow direction B → A

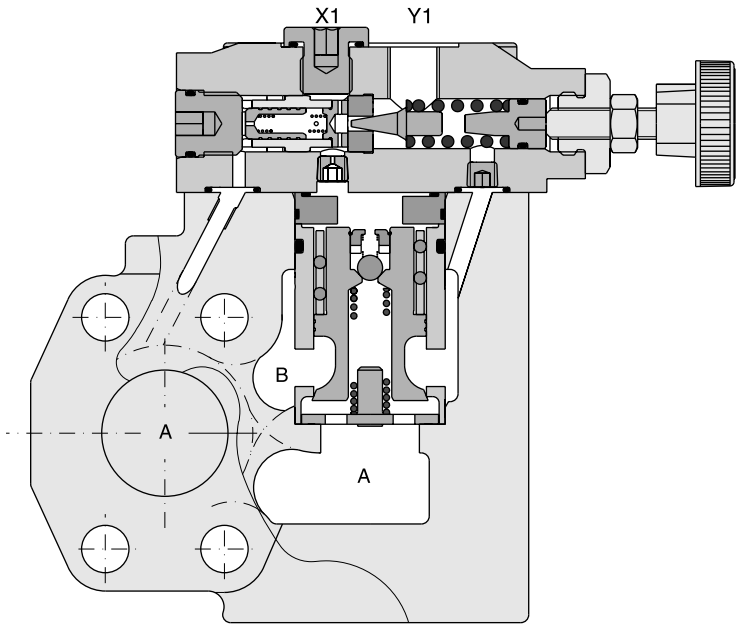

Ordering Code

R5R	☐	–	☐	8	☐	☐	6	☐	☐	A	☐	☐
Pressure reducing valve	Nominal size		SAE61 Interface	2-port body (X1, Y1 = G¼")	Pressure stages	Adjust-ment	External drain from Y1 port	Switching type	Solenoid voltage	Design series	Seals	Options

Code	Port size
06	SAE ¾"
08	SAE 1"
10	SAE 1¼"

SAE61		
Code	Size	Max. pressure [bar]
4	10	280
5	06/08	350

Code	Pressure stages
1	up to 105 bar
3	up to 210 bar
5 [1]	up to 350 bar

Code	Adjustment
1	Hand knob
3	Acorn nut with lead seal
4	Cylinder lock

Code	Seals
1	NBR
5	FPM

Code	Solenoid voltage
omit	Standard w/o vent function
G0R	12 V=
G0Q	24 V=
GAR [2]	98 V=
GAG [2]	205 V=
W30	110 V / 50 Hz 120 V / 60Hz
W31	230 V / 50 Hz 240 V / 60 Hz

Code	Switching type
omit	Standard w/o vent function
09	Solenoid not activ. unpress. circulation
11	Solenoid activated unpress. circulation

Further options on request

9

[1] R5R10-485 up to 280 bar
[2] To be used in combination with rectifier plugs at 120 VAC / 230 VAC power supply.

General							
Size		06 (¾")		08 (1")		10 (1¼")	
Mounting		Flanged according to SAE61					
Mounting position		unrestricted					
Ambient temperature	[°C]	-20...+50					
$MTTF_D$ value	[years]	75					
Weight	[kg]	4.0		4.6		5.9	
Hydraulic							
Max. operating pressure	[bar]						
Ports A, B, X1		350		350		280	
Port Y1		30		30		30	
Flow direction		B → A					
Pressure stages	[bar]	105, 210, 350					
Nominal flow	[l/min]	90		300		500	
Fluid		Hydraulic oil according to DIN 51524...51525					
Fluid temperature	[°C]	-20...+80					
Viscosity permitted	[cSt] / [mm^2/s]	10...650					
Viscosity recommended	[cSt] / [mm^2/s]	30					
Filtration		ISO 4406 (1999); 18/16/13					
Electrical							
Duty ratio		100% ED; CAUTION: coil temperature up to 150 °C possible					
Solenoid connection		Connector as per EN175301-803, solenoid identification as per ISO 9461					
Protection class		IP65 in accordance with EN 60529 (with correctly mounted plug-in connector)					
	Code	G0R	G0Q	GAR	GAG	W30	W31
Supply voltage	[V] [V]	12 V =	24 V =	98 V =	205 V =	110 at 50 Hz 120 at 60 Hz	230 at 50 Hz 240 at 60 Hz
Tolerance supply voltage	[%]	±10	±10	±10	±10	±5	±5
Power consumption hold	[W]	32.7	31	31.9	28.2	70 / 70 VA	70 / 70 VA
Power consumption in rush	[W]	32.7	31	31.9	28.2	280 / 290 VA	280 / 290 VA
Response time	[ms]	Energized / De-energized AC: 20/18, DC: 46/27					
Wiring min.	[mm^2]	3 x 1.5 recommended					
Wiring length max.	[m]	50 recommended					

9

Reduced pressure pA versus flow Q
R5R06 [1)]

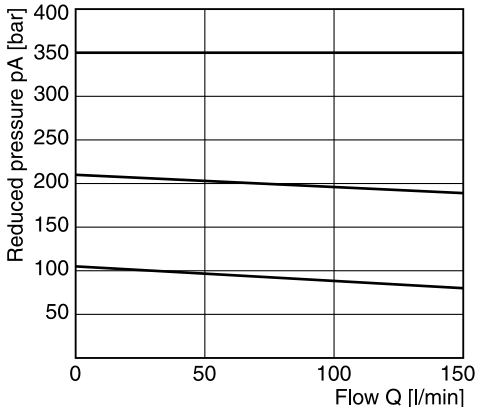

Minimum pressure curve

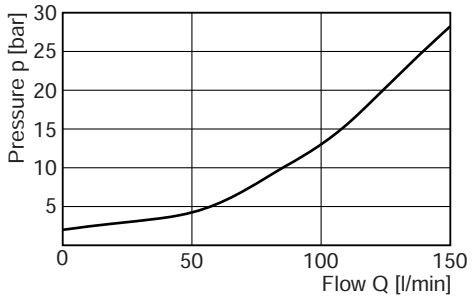

Reduced pressure pA versus flow Q
R5R08 [1)]

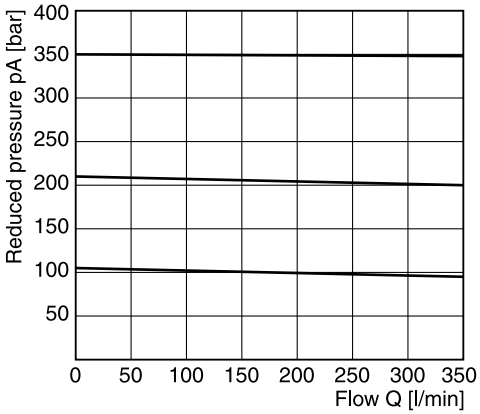

Minimum pressure curve

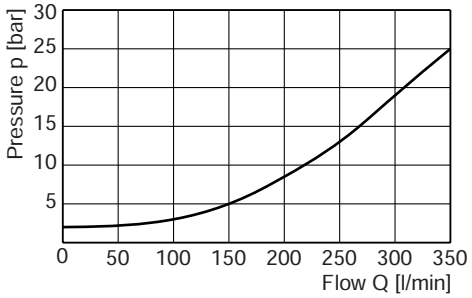

Reduced pressure pA versus flow Q
R5R10 [1)]

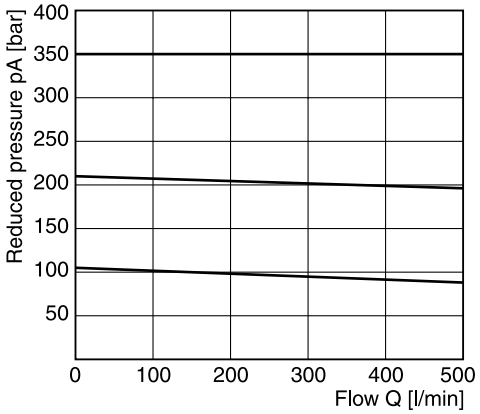

Minimum pressure curve

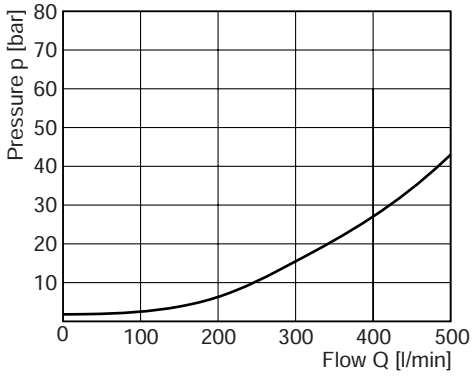

All characteristic curves measured with HLP46 at 50 °C.

[1)] Measured at 350 bar primary pressure pB.

R5R

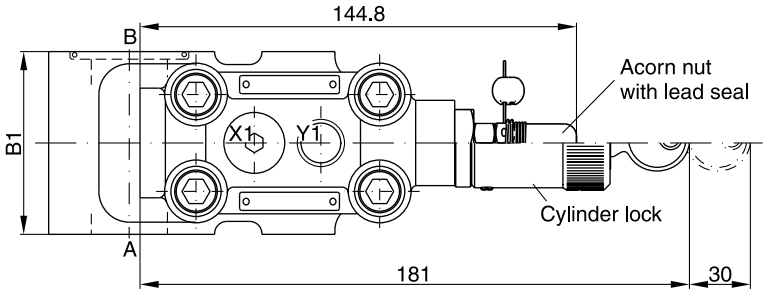

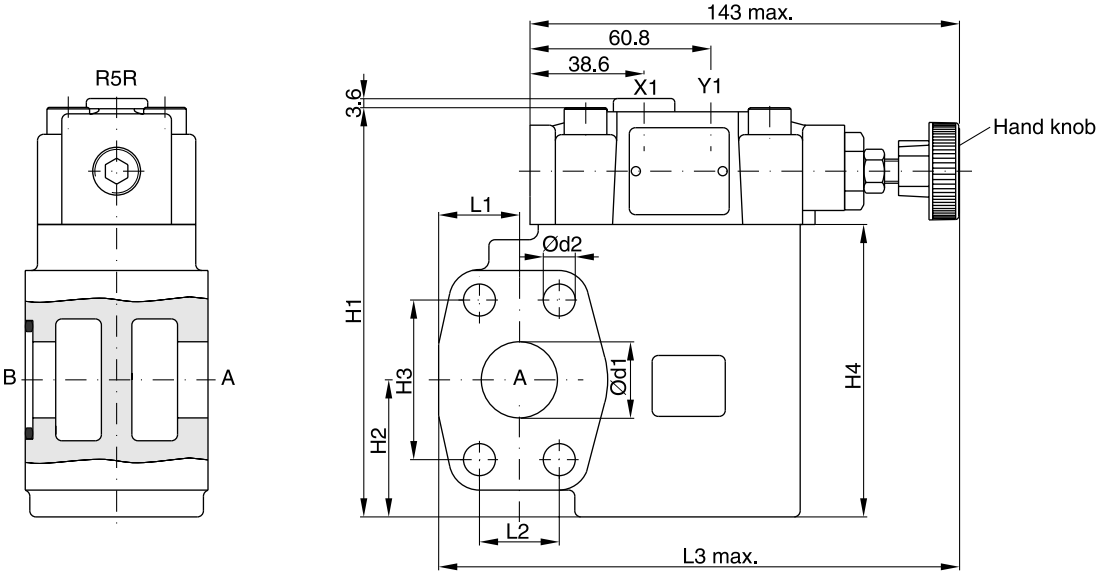

Seal kits		
NG	NBR	FPM
06	S16-91850-0	S16-91850-5
08	S16-91851-0	S16-91851-5
10	S16-91852-0	S16-91852-5

NG	B1	H1	H2	H3	H4	L1	L2	L3	d1	d2
06	60	131.6	37	47.6	90	24.6	22.2	152	19	10.5
08	60	137.6	45	52.4	96	26.5	26.2	171	25	10.5
10	75	150.6	48	58.7	109	34.0	30.2	179	32	12.5

Port	Function	Port size		
		R5R06	R5R08	R5R10
B	Inlet pressure	¾" SAE61	1" SAE61	1¼" SAE61
A	Reduced outlet pressure	¾" SAE61	1" SAE61	1¼" SAE61
Y1	External drain	G¼"	G¼"	G¼"
X1	Pressure gauge	G¼"	G¼"	G¼"

R5R with vent function

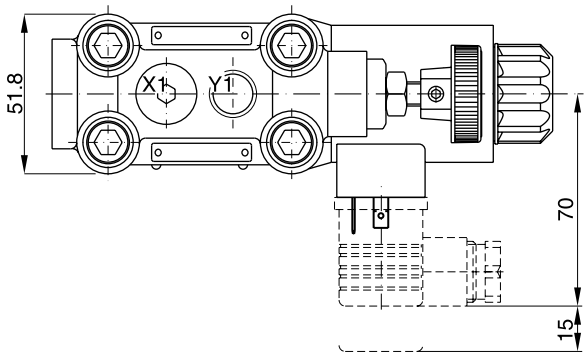

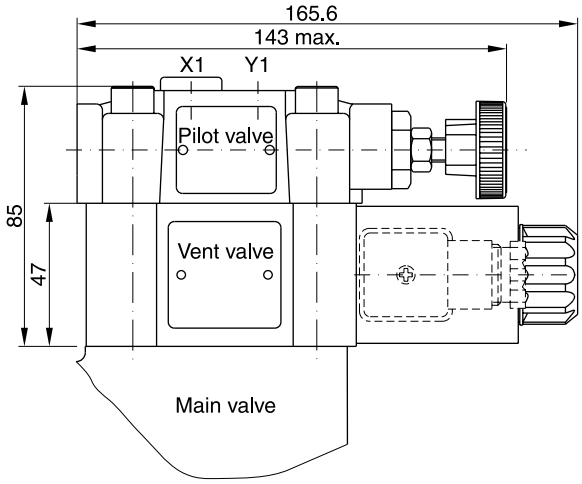

Seal kits	
NBR	**FPM**
DC solenoid	
S56-40609-0	S56-40609-5
AC solenoid	
S26-35237-0	S26-35237-5

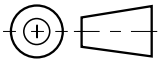

9

Code	External drain
11	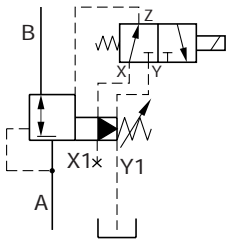
09	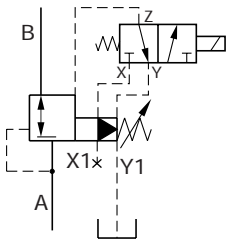

Proportional pressure relief valves series R5V*P2 are based on the mechanically adjusted series R5V. The additional proportional unit between the mechanical pilot valve and the main stage allows continuous pressure adjustment.

The optimum performance can be achieved in combination with the digital amplifier module PCD00A-400.

Features

- Continuous adjustment by proportional solenoid
- R5V with 2-port body
  - 3 sizes (SAE ¾", 1", 1¼")
  - SAE61 flange
- R5V with 3-port body
  - 4 sizes (SAE ¾", 1", 1¼", 1½")
  - SAE61 and SAE62 flange
- 3 pressure stages
- With mechanical maximum pressure adjustment

R5V*P2 2-port

R5V*P2 3-port

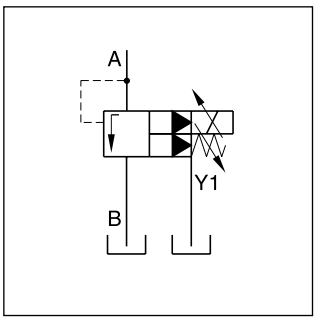

R5V*P2 2-port

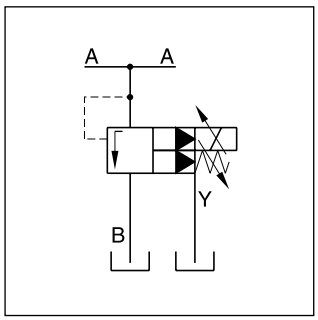

R5V*P2 3-port

R5V*P2 2-port

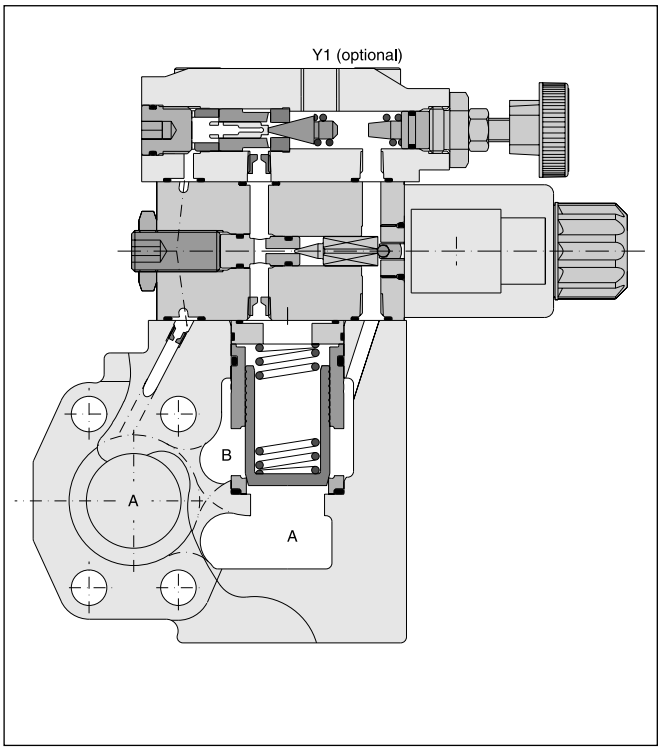

R5V*P2 3-port

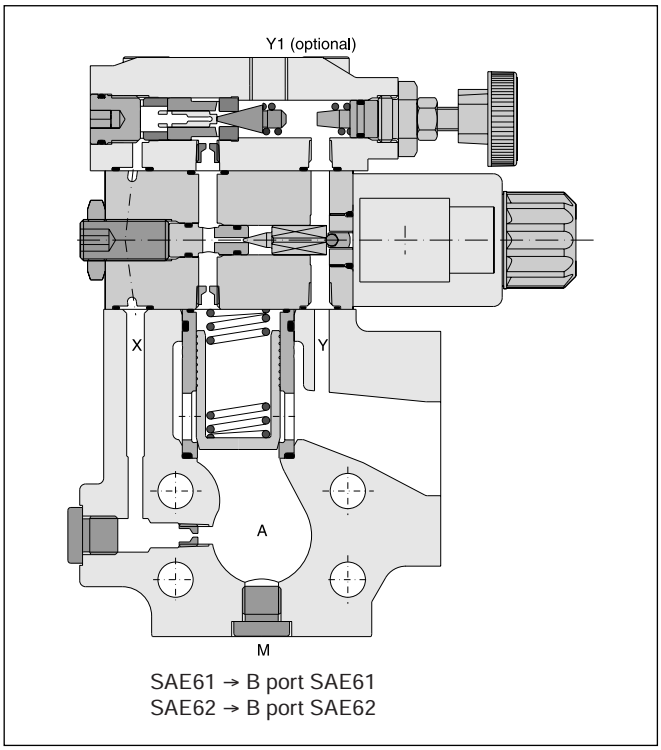

9

R5V	☐	–	☐	☐	☐	☐	☐	P2	G0R	A	☐	☐	☐
Proportional pressure relief valve	**Nominal size**		**SAE interface**	**Pilot ports**	**Pressure stages**	**Adjust-ment**	**Pilot oil**	**Propor-tional pressure control**	**Solenoid voltage 12 V 2.3 A [4]**	**Design**	**Seals**	**Design series** (not required for ordering)	**Options**

Code	Port size
06	SAE ¾"
08	SAE 1"
10	SAE 1¼"
12 [1]	SAE 1½"

SAE61		
Code	Size	Max. pressure [bar]
3	12	210
4	10	280
5	06/08	350
SAE62		
Code	Size	Max. pressure [bar]
6 [1]	06/08/10/12	350

2-port body	
Code	pilot ports
7	Y1 = G¼" [2]
3-port body	
Code	pilot ports
9	Y1 [2], X1, M = G¼"

Code	Options
070	Metric 3-port body for R5V10 SAE62: Pressure ports (A): SAE62 with 15 mm through holes (for M14), Tank port: SAE61 (M12)
152 [5]	3-port body with metric threads

Code	Seals
1	NBR
5	FPM

Pilot oil	
Code	Drain line
2	internal
6	external from Y1-port

Code	Adjustment
1	Hand knob
3	Acorn nut with lead seal

Code	Pressure stages
1	up to 105 bar
3	up to 210 bar
5 [3]	up to 350 bar

9

[1] Only R5V 3port
[2] Y1 only available at external drain (pilot oil code 6)
[3] R5V10-4*5 up to 280 bar
[4] Onboard electronics on request
[5] R5V08 SAE62: Tank port SAE61 (M10)

General						
Size			06 (¾")	08 (1")	10 (1¼")	12 (1½")
Mounting			Flanged according to SAE61 (size 12 = SAE62)			
Mounting position			unrestricted			
Ambient temperature		[°C]	-20...+50			
$MTTF_D$ value		[years]	75			
Weight	R5V 2port	[kg]	5.8	6.4	7.7	—
	R5V 3port	[kg]	5.4	6.4	7.0	9.8
Hydraulic						
Max. operating pressure		[bar]				
	SAE61 Ports A, B		350	350	280	210
	Port Y1		30	30	30	30
	SAE62 Ports A, B		350	350	350	350
	Port Y1		30	30	30	30
Pressure stages		[bar]	105, 210, 350			
Nominal flow		[l/min]	90	300	600	600
Fluid			Hydraulic oil according to DIN 51524...51525			
Fluid temperature		[°C]	-20...+80			
Viscosity permitted		[cSt] / [mm^2/s]	10...650			
Viscosity recommended		[cSt] / [mm^2/s]	30			
Filtration			ISO 4406 (1999); 18/16/13			
Electrical (proportional solenoid)						
Duty ratio			100 % ED; CAUTION: coil temperature up to 150 °C possible			
Nominal voltage		[V]	12			
Max. current		[A]	2.3			
Coil resistance		[Ohm]	4 at 20 °C			
Solenoid connection			Connector as per EN175301-803, solenoid identification as per ISO 9461			
Protection class			IP65 in accordance with EN 60529 (with correctly mounted plug-in connector)			
Power amplifier			PCD00A-400			

9

Signal/pressure curve R5V*P2

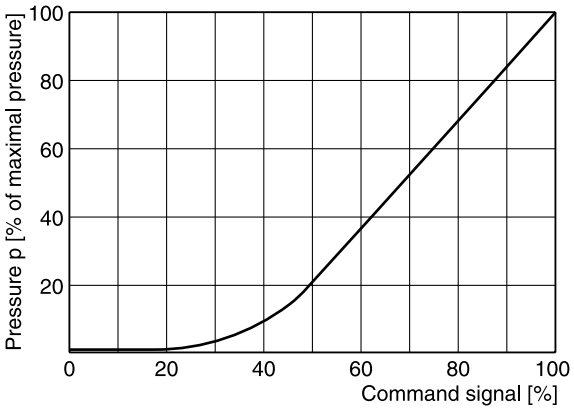

p/Q performance curve [1)]

R5V06*P2

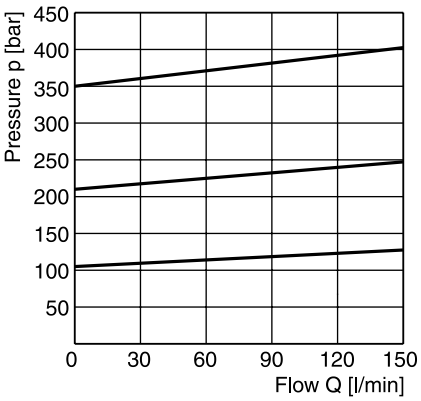

R5V08*P2

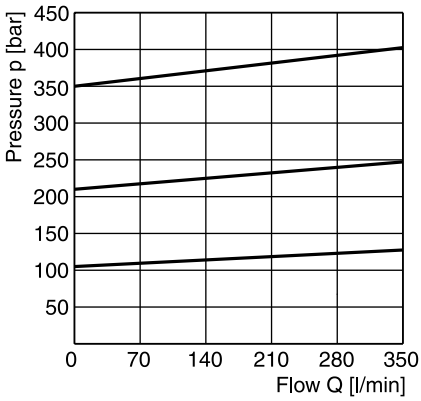

R5V10*P2

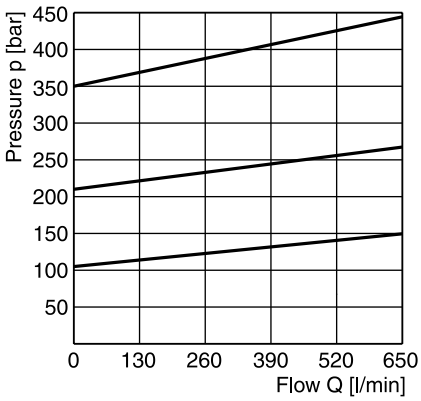

9

Minimum pressure curve [1)]

R5V06*P2

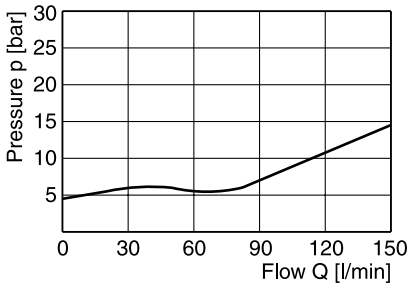

R5V08*P2

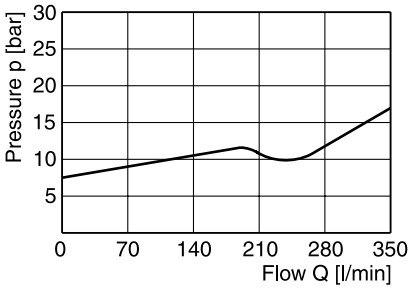

R5V10*P2

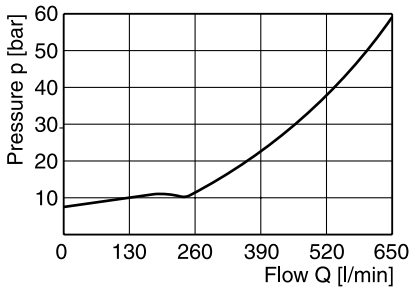

All characteristic curves measured with HLP46 at 50 °C.

[1)] The performance curves are measured with external drain. For internal drain the tank pressure has to be added to curve.

R5V*P2 2-port

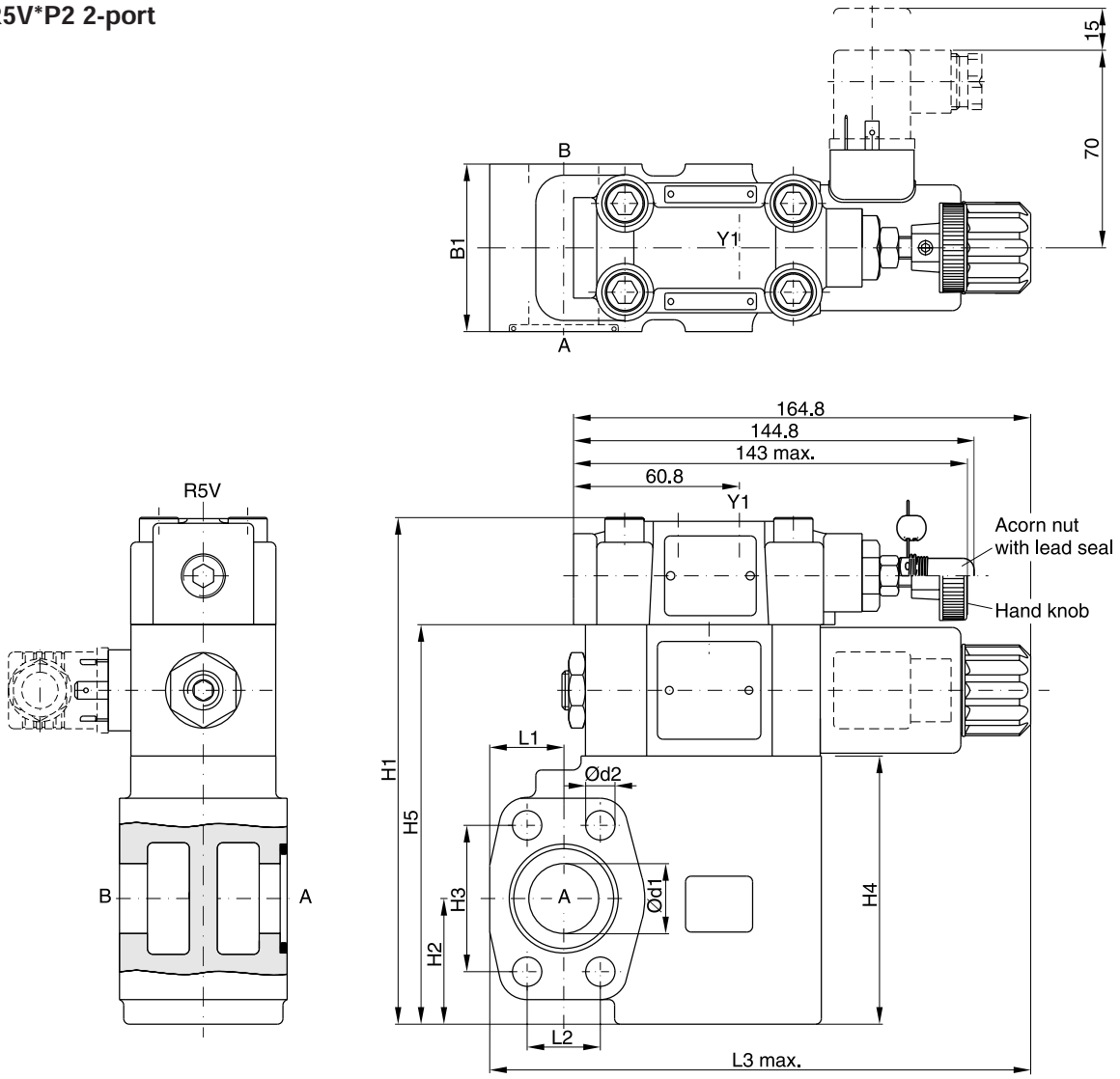

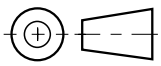

9

SAE61

Seal kits		
NG	NBR	FPM
06	S16-91850-0	S16-91850-5
08	S16-91851-0	S16-91851-5
10	S16-91852-0	S16-91852-5
Prop. section P2 *	S26-58473-0	S26-58473-5

NG	B1	H1	H2	H3	H4	H5	L1	L2	L3	d1	d2
06	60	175	37	47.6	90	137	24.6	22.2	174	19	10.5
08	60	181	45	52.4	96	143	26.5	26.2	193.6	25	10.5
10	75	194	48	58.7	109	156	34.0	30.2	201	32	12.5

Port	Function	Port size		
		R5V06	R5V08	R5V10
A	Pressure	¾" SAE61	1" SAE61	1¼" SAE61
B	Tank	¾" SAE61	1" SAE61	1¼" SAE61
Y1	External drain	G¼"	G¼"	G¼"

* Please combine seal kit of one size with seal kit of Prop. section P2 for complete seal kit

R5VP2 UK.INDD CM 18.07.13

R5V*P2 3-port

Seal kits		
NG	NBR	FPM
06	S16-91850-0	S16-91850-5
08	S16-91851-0	S16-91851-5
10	S16-91852-0	S16-91852-5
12	S26-27421-0	S26-27421-5
Prop. section P2 *	S26-58473-0	S26-58473-5

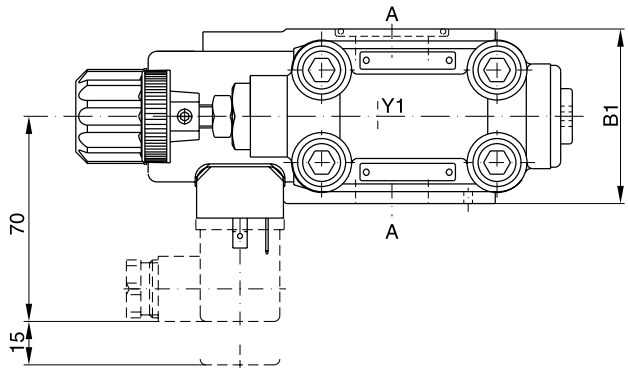

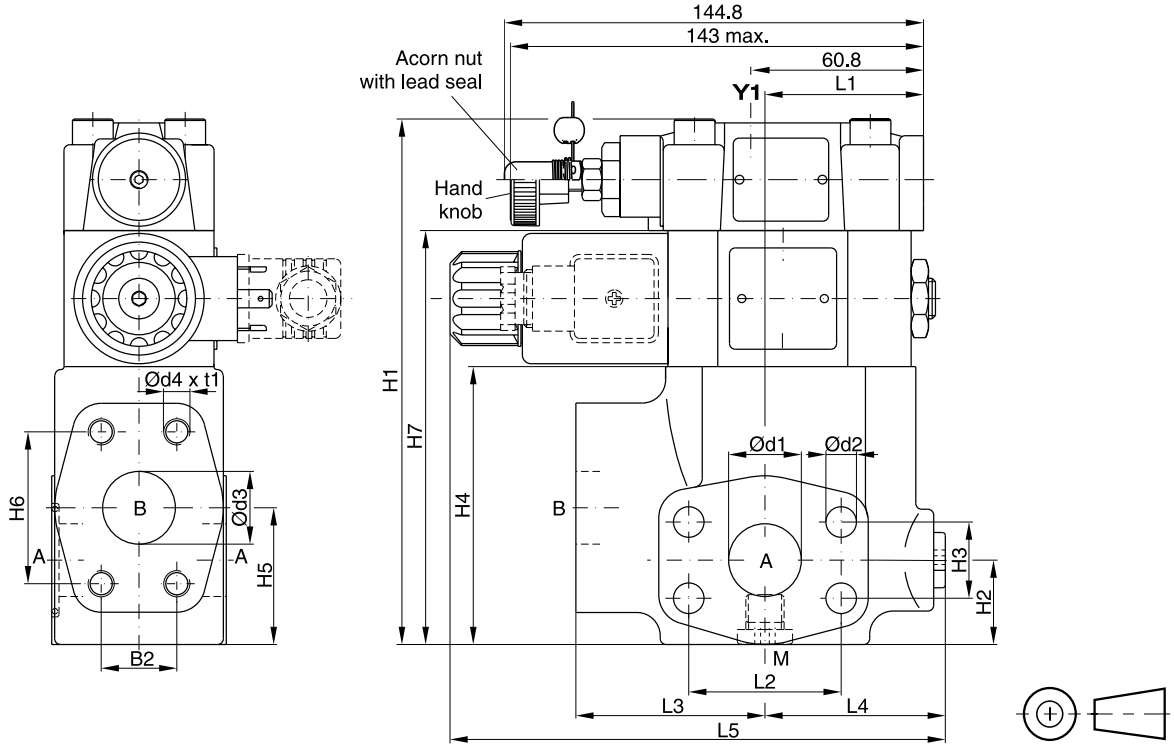

9

SAE61

NG	B1	B2	H1	H2	H3	H4	H5	H6	H7	L1	L2	L3	L4	L5	d1	d2	d3	d4 (option 152)	t1
06	60	22.2	166	29.5	22.2	81	41.6	47.6	128	50.3	47.6	63	56	174.6	19	10.5	19	3/8"-16 UNC (M10)	20
08	60	26.2	188	30.5	26.2	103	47	52.4	150	55.8	52.4	65	58	177	25	10.5	25	3/8"-16 UNC (M10)	23
10	75	30.2	198	37.5	30.2	113	64	58.7	160	57.8	58.7	61	62	179.1	32	12.5	32	7/16"-14 UNC (M12)	22
12	80	35.7	225	35.5	35.7	140	73	69.8	187	37.3	69.8	92.5	55.2	186.8	38	13.5	38	1/2"-13 UNC (M12)	27

SAE62

NG	B1	B2	H1	H2	H3	H4	H5	H6	L1	L2	L3	L4	L5	d1	d2	d3	d4 (option 152)	t1
06	60	23.8	119	29.5	23.8	81	41.6	50.8	50.3	50.8	63	56	152	19	10.5	19	3/8"-16 UNF (M10)	20
08	60	27.8	141	30.5	27.8	103	47	57.2	55.8	57.2	65	58	149	25	12.5	25	7/16"-14 UNC (M10)[1]	22
10	75	31.8	151	37.5	31.8	113	64	66.7	57.8	66.7	61	62	150.5	32	13.5	32	1/2"-13 UNC (M12)	24
12	80	36.5	178	35.5	36.5	140	73	79.4	37.3	79.4	92.5	55.2	171.2	38	17	38	5/8"-11 UNC (M16)	33

Port	Function	Port size			
		R5V06	R5V08	R5V10	R5V12
A (2)	Pressure	¾" SAE61/62	1" SAE61/62	1¼" SAE61/62	1½" SAE61/62
B	Tank	¾" SAE61/62	1" SAE61/62	1¼" SAE61/62	1½" SAE61/62
Y1	External drain	G¼"	G¼"	G¼"	G¼"
M	Pressure gauge	G¼"	G¼"	G¼"	G¼"

* Please combine seal kit of one size with seal kit of Prop. section P2 for complete seal kit
[1] T-port SAE61

R5VP2 UK.INDD CM 18.07.13

Proportional pressure reducing valves series R5R*P2 are based on the mechanically adjusted series R5R. The additional proportional unit between the mechanical pilot valve and the main stage allows continuous pressure adjustment.

The optimum performance can be achieved in combination with the digital amplifier module PCD00A-400.

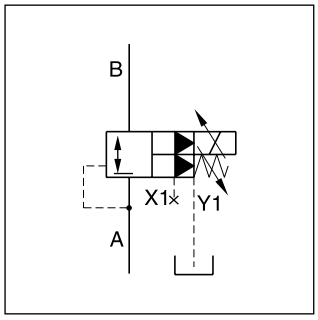

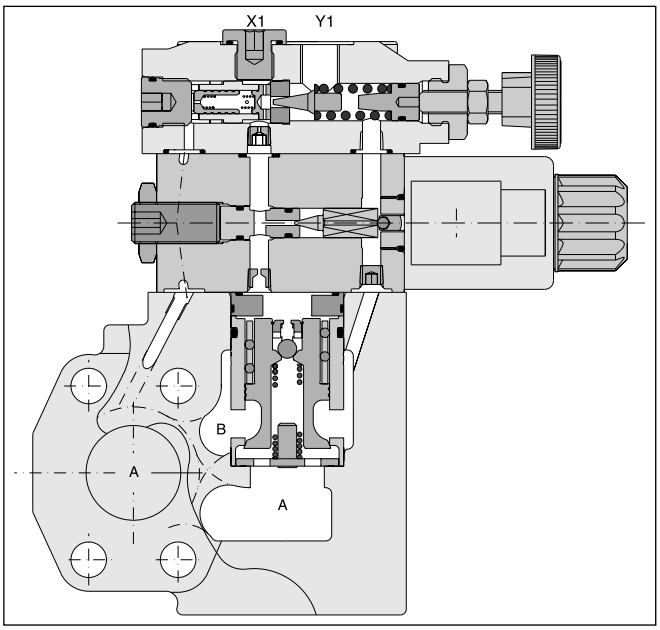

Features

- Continuous adjustment by proportional solenoid
- 2-port body with SAE61 flange
- 3 sizes (SAE ¾", 1", 1¼")
- 3 pressure stages
- With mechanical maximum pressure adjustment

Ordering code

R5R		–		8			6	P2	G0R	A		
Pressure reducing valve	Nominal size		SAE61 interface	Body 2-port (X1, Y1 = G¼")	Pressure stages	Adjust-ment	External drain from Y1-port	Propor-tional pressure control	Solenoid voltage 12 V 2.3 A	Design series	Seals	Options

Code	Port size
06	SAE ¾"
08	SAE 1"
10	SAE 1¼"

SAE 61		
Code	Size	Max. pressure [bar]
4	10	280
5	06/08	350

Code	Pressure stages
1	up to 105 bar
3	up to 210 bar
5 [1)]	up to 350 bar

Code	Seals
1	NBR
5	FPM

Code	Adjustment
1	Hand knob
3	Acorn nut with lead seal

Further options on request

[1)] R5R10-485 up to 280 bar

R5RP2 UK.INDD CM 29.08.13

Technical data

General					
Size			06 (¾")	08 (1")	10 (1¼")
Mounting			Flanged according to SAE61		
Mounting position			unrestricted		
Ambient temperature		[°C]	-20...+50		
$MTTF_D$ value		[years]	75		
Weight		[kg]	5.8	6.4	7.7
Hydraulic					
Max. operating pressure	Ports A, B, X1	[bar]	350	350	280
	Port Y1	[bar]	30	30	30
Pressure stages		[bar]	105, 210, 350		
Nominal flow		[l/min]	90	300	500
Fluid			Hydraulic oil according to DIN 51524...51525		
Fluid temperature		[°C]	-20...+80		
Viscosity	permitted	[cSt] / [mm^2/s]	10...650		
	recommended	[cSt] / [mm^2/s]	30		
Filtration			ISO 4406 (1999); 18/16/13		
Electrical					
Duty ratio			100 % ED; CAUTION: coil temperature up to 150 °C possible		
Nominal voltage		[V]	12		
Max. current		[A]	2.3		
Coil resistance		[Ohm]	4 at 20 °C		
Solenoid connection			Connector as per EN175301-803, solenoid identification as per ISO 9461		
Protection class			IP65 in accordance with EN 60529 (with correctly mounted plug-in connector)		
Power amplifier			PCD00A-400		

Command / pressure curve

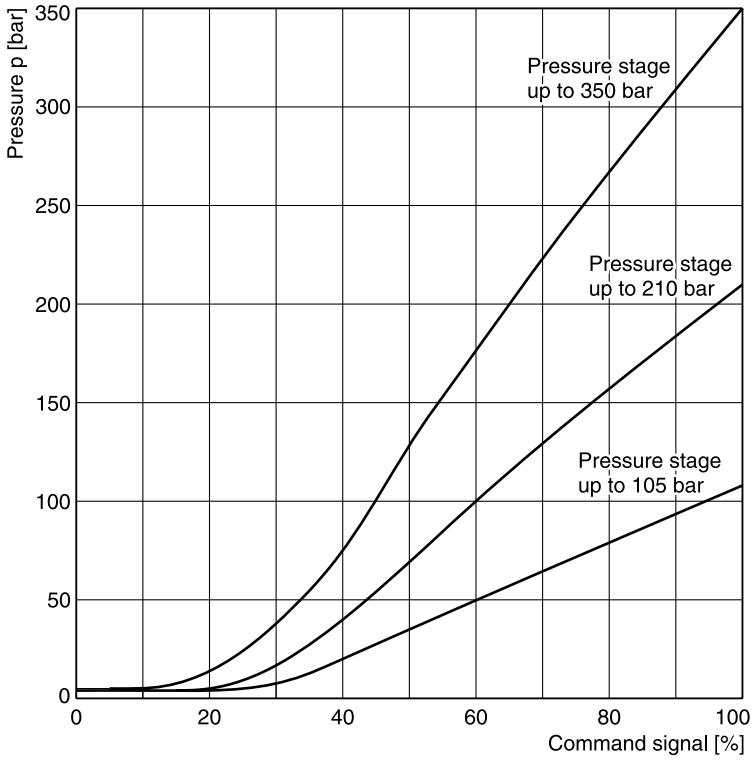

All characteristic curves measured with HLP46 at 50 °C.

Reduced pressure pA vs. flow Q
R5R06*P2 [1)]

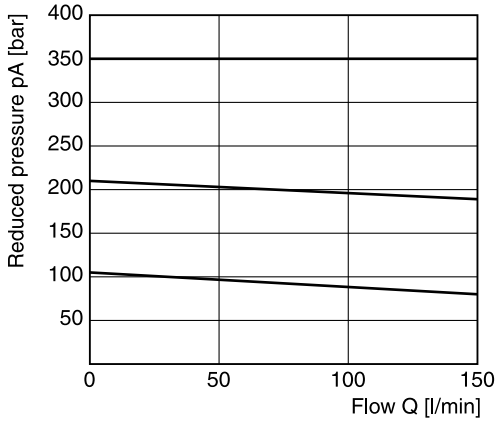

Minimum pressure curve

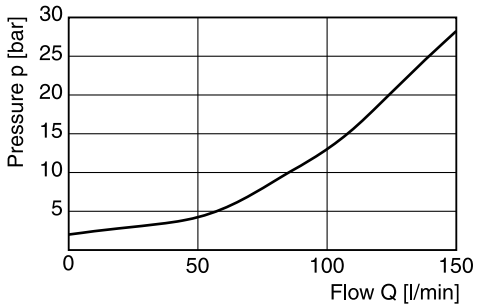

Reduced pressure pA vs. flow Q
R5R08*P2 [1)]

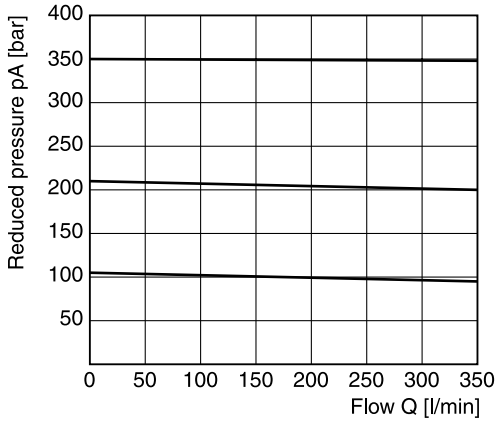

Minimum pressure curve

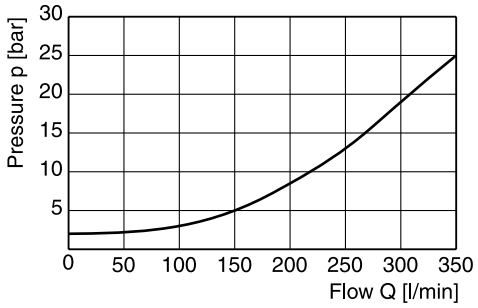

Reduced pressure pA vs. flow Q
R5R10*P2 [1)]

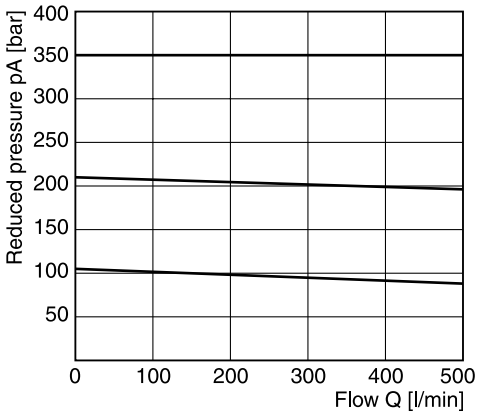

Minimum pressure curve

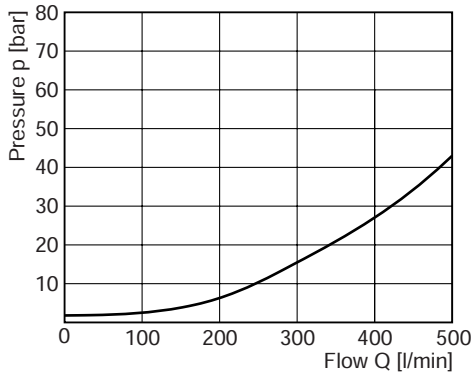

All characteristic curves measured with HLP46 at 50 °C.

[1)] Measured at 350 bar primary pressure pB.

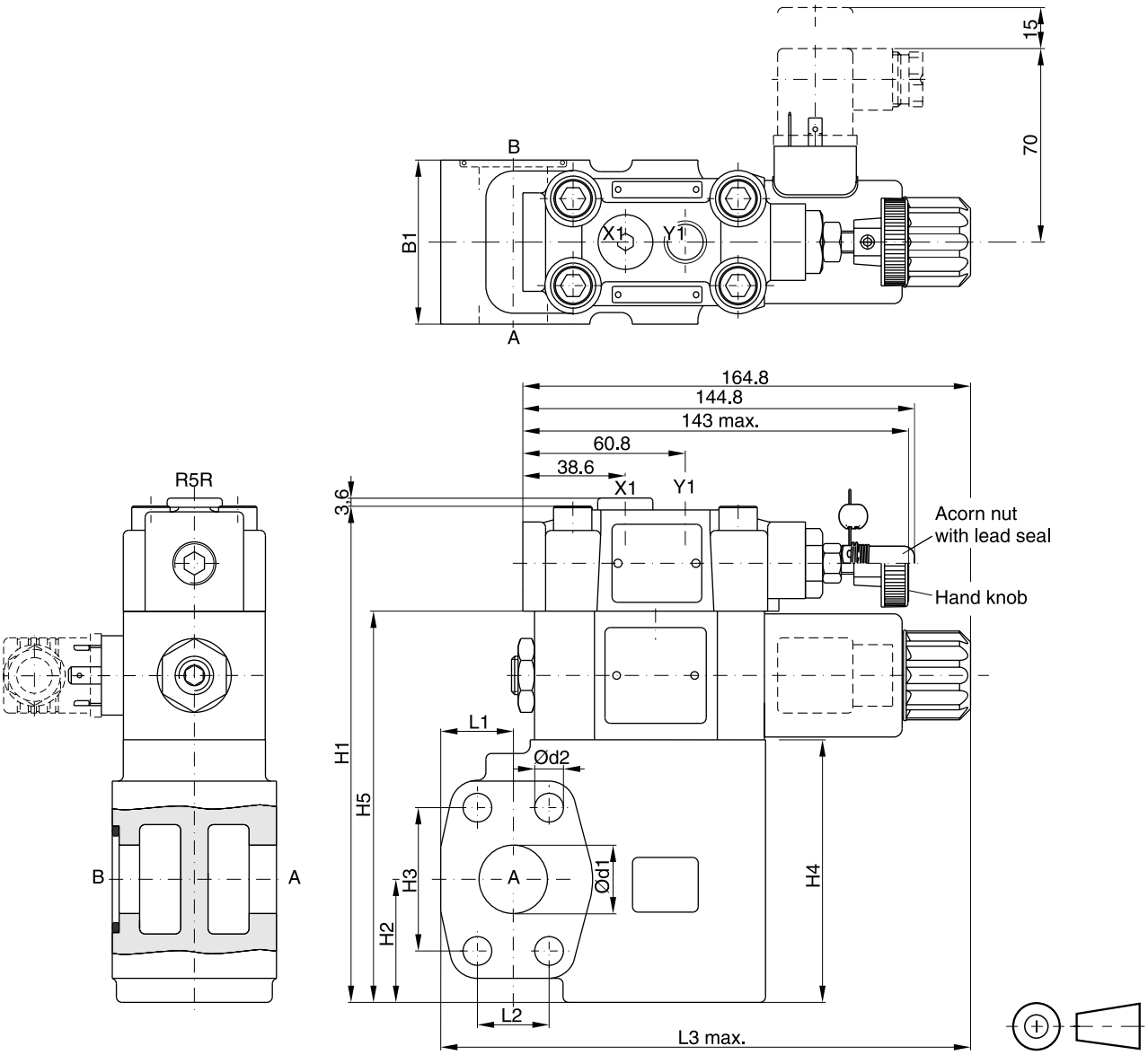

Seal kits		
NG	NBR	FPM
06	S16-91850-0	S16-91850-5
08	S16-91851-0	S16-91851-5
10	S16-91852-0	S16-91852-5
Prop. section P2 *	S26-58473-0	S26-58473-5

NG	B1	H1	H2	H3	H4	H5	L1	L2	L3	d1	d2
06	60	175	37	47.6	90	137	24.6	22.2	174	19	10.5
08	60	181	45	52.4	96	143	26.5	26.2	193.6	25	10.5
10	75	194	48	58.7	109	156	34.0	30.2	201	32	12.5

Port	Function	Port size		
		R5R06	R5R08	R5R10
B	Inlet pressure	¾" SAE61	1" SAE61	1¼" SAE61
A	Reduced outlet pressure	¾" SAE61	1" SAE61	1¼" SAE61
Y1	External drain	G¼"	G¼"	G¼"
X1	Pressure gauge	G¼"	G¼"	G¼"

* Please combine seal kit of one size with seal kit of Prop. section P2 for complete seal kit

R5RP2 UK.INDD CM 29.08.13

Seat valves series D5S are designed for directional control functions. They enable individual hydraulic solutions for nominal flow up to 800 l/min due to a large variety of poppets, springs and covers, including shuttle valves, stroke limiters, solenoid valves (VV01) and position control.

A complete program is offered under the Parker brand:

subplate mounted valves	(Series D4S - chapter 6)
SAE flange valves	(Series D5S - chapter 9)
pipe mounted valves	(Series D4S - chapter 10)
slip-in cartridges	(Series CAR - on request)

Features

- Leak-free seat valve design
- 2- and 3-port bodies
- SAE61 flange
- Numerous pilot options
- 4 sizes, SAE ¾", 1", 1 ¼", 1 ½"
- 6 poppet types

D5S 2-port

D5S 3-port

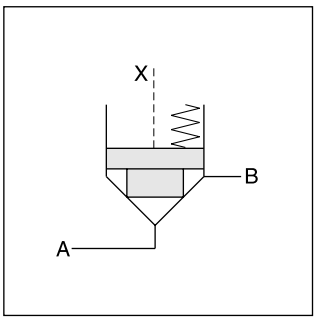

D5S 2-port

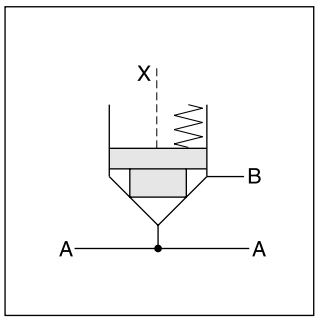

D5S 3-port

D5S 2-port

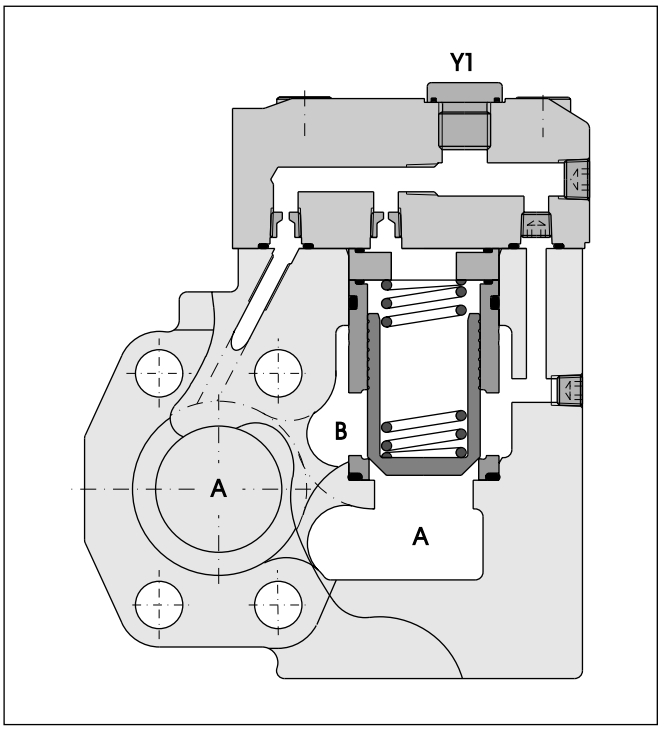

D5S 3-port

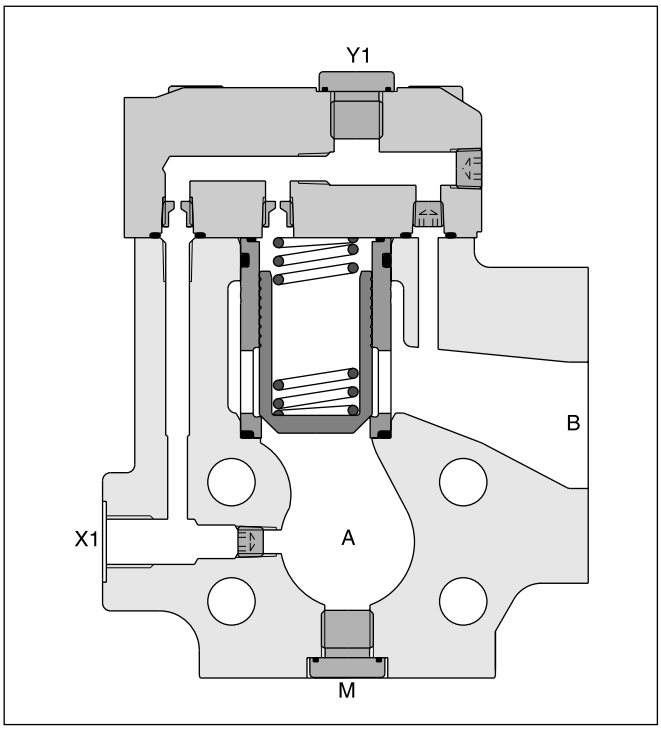

9

D5S	[ ]	–	[ ]	[ ]	[ ]	[ ]	[ ]	[ ]	[ ]	[ ]	B	[ ]	[ ]
Seat valve	Nominal size		Body	Pilot body configuration	Pilot cap	Sleeve	Spool type	Spring	Switching type	Solenoid voltage	Design series	Seals	Options

Code	Port size
06	SAE ¾"
08	SAE 1"
10	SAE 1¼"
12 [1]	SAE 1½"

Code	Body	Ports
5	3-port	Seat entry, A; X1, Y1, M = G¼"
7	2-port	Seat entry, A; X1, Y1 = G¼"
8	2-port	Annular entry, B; X1, Y1 = G¼"

Code	Pilot oil line in body
1	internal from A
2	internal from B
3	internal from A and B
4	external from X1
5	internal from B, external from X1

Code	Body	Ports	X	Y	Z	X-Y	X1	Y1	VV01
Standard									
1	2-/3-port	Pilot oil = pilot drain	⊖	●	⊖	○	—	●	—
2	2-/3-port	Pilot oil = pilot drain	●	⊖	⊖	○	—	●	—
3	2-port	Pilot oil = pilot drain	●	●	⊖	○	○	●	—
With solenoid valve (VV01)									
4	2-/3-port	Internal to B	⊖	○	⊖	●	—	●	○
5	2-port	Internal to B	●	○	⊖	●	○	●	○
6	2-/3-port	Ext. out of cap	⊖	○	⊖	●	—	○	●
7	2-port	Ext. out of cap	●	○	⊖	●	○	○	●
With stroke limiter (not for D5S06)									
A	2-/3-port	Pilot oil = pilot drain	⊖	●	⊖	—	●	—	—
B	2-/3-port	Pilot oil = pilot drain	●	⊖	—	—	●	—	—
C	2-port	Pilot oil = pilot drain	●	●	⊖	—	○	—	—

○ open bore ● closed bore ⊖ orifice Ø 1.2

Code	Sleeve
1	AA = 95 %, AB = 5 %
3	AA = 60 %, AB = 40 %

Code	Size	Poppet type	Sleeve
1	06, 08,10,12	With closed bottom and 15° chamfer (p_Z max. = p_A +20 bar)	1
2	06	With 0.8 dia. orifice at the bottom and 15°chamfer	1
	08, 10	With 1.2 dia. orifice at the bottom and 15°chamfer	1
4	06, 08,10,12	With closed bottom and 45° chamfer	1, 3
A [2]	08, 10, 12	Safety spool (for end position control only)	3
B [2]	08, 10, 12	Throttle spool, 10° chamfer	3
C [2]	08, 10, 12	Throttle spool, 3° chamfer	3

Code	Options
omit	Standard
013	Position control with protection

Code	Seals
1	NBR
5	FPM

Code	Solenoid voltage
omit	Standard w/o vent function
G0R	12 V=
G0Q	24 V=
GAR [4]	98 V=
GAG [4]	205 V=
W30	110 V / 50 Hz ; 120 V / 60 Hz
W31	230 V / 50 Hz ; 240 V / 60 Hz

Code	Switching type	
omit	Standard w/o vent function	
09	VV01 with manual override	de-energized: open
10	VV01 without manual override	
11	VV01 with manual override	de-energized: closed
12	VV01 without manual override	
CA	Shuttle valve	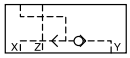
DA	Shuttle valve	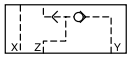
CB	VV01 code 09 and shuttle valve code CA	
CD	VV01 code 11 and shuttle valve code CA	
DB	VV01 code 09 and shuttle valve code DA	
DD	VV01 code 11 and shuttle valve code DA	
BH	VV01 code 10 and shuttle valve code CA and position control [3] with amplifier	
BK	VV01 code 12 and shuttle valve code CA and position control [3] with amplifier	
BN	VV01 code 10 and shuttle valve code DA and position control [3] with amplifier	
BQ	VV01 code 12 and shuttle valve code DA and position control [3] with amplifier	
BC	VV01 code 10 and position control [3] with amplifier	
BE	VV01 code 12 and position control [3] with amplifier	
BA	Position control [3] with amplifier	
BF	Position control [3] with amplifier and shuttle valve code CA	
BL	Position control [3] with amplifier and shuttle valve code DA	

Code	Spring (approx. cracking pressure [bar])					
	Sleeve Code 1		Sleeve Code 3			
	A -> B		A -> B		B -> A	
	D5S06	D5S08/12	D5S06	D5S08/12	D5S06	D5S08/12
1	2.8	3.5	6.5	6.5	9.5	11.0
2	0.5	0.5	1.0	1.0	1.5	1.7
3	0.3	0.3	0.6	0.6	0.9	1.0
4	2.2	2.2	4.0	3.5	5.5	6.0
5	—	9.0	—	16.0	—	28.0
6	1.2	1.2	2.0	2.2	3.0	3.8
7	3.0	—	8.0	—	12.0	—

[1] D5S 3-port only
[2] Springs 2, 3 and 6 only
[3] Position control for D5S08/10 only. Spring 2 or 4. Spool A and sleeve 3.
[4] To be used in combination with rectifier plugs at 120 VAC / 230 VAC power supply.

Examples see end of chapter.

Technical data

General					
Size		06 (¾")	08 (1")	10 (1¼")	12 (1½")
Mounting		Flanged according to SAE61			
Mounting position		unrestricted			
Ambient temperature	[°C]	-20...+50			
$MTTF_D$ value	[years]	150			
Weight D5S 2port	[kg]	3.6	4.1	5.4	—
Weight D5S 3port	[kg]	3.4	4.4	5.0	7.8
Hydraulic					
Max. operating pressure	[bar]				
SAE61 Ports A, B		350	350	280	210
Port Y1		30	30	30	30
Nominal flow	[l/min]	180	360	600	800
Fluid		Hydraulic oil according to DIN 51524...51525			
Fluid temperature	[°C]	-20...+80			
Viscosity permitted	[cSt] / [mm^2/s]	10...650			
Viscosity recommended	[cSt] / [mm^2/s]	30			
Filtration		ISO 4406 (1999); 18/16/13			

Electrical (solenoid)							
Duty ratio		100 % ED; CAUTION: coil temperature up to 150 °C possible					
Solenoid connection		Connector as per EN175301-803, solenoid identification as per ISO 9461					
Protection class		IP65 in accordance with EN 60529 (with correctly mounted plug-in connector)					
	Code	G0R	G0Q	GAR	GAG	W30	W31
Supply voltage	[V] [V]	12 V =	24 V =	98 V =	205 V =	110 at 50 Hz 120 at 60 Hz	230 at 50 Hz 240 at 60 Hz
Tolerance supply voltage	[%]	±10	±10	±10	±10	±5	±5
Power consumption hold	[W]	32.7	31	31.9	28.2	70 / 70 VA	70 / 70 VA
Power consumption in rush	[W]	32.7	31	31.9	28.2	280 / 290 VA	280 / 290 VA
Response time	[ms]	Energized / De-energized AC: 20/18 , DC: 46/27					
Wiring min.	[mm^2]	3 x 1.5 recommended					
Wiring length max.	[m]	50 recommended					

D5S pilot configuration

3-port	2-port: seat entry	2-port: annular entry	
standard			
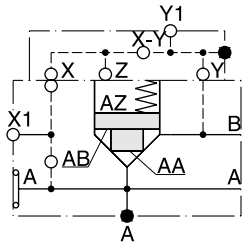	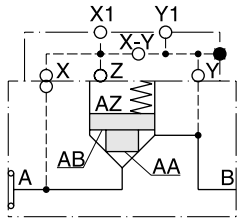	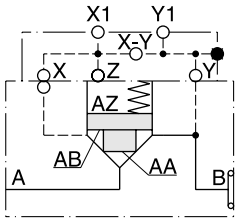	
with vent valve VV01			**VV01**
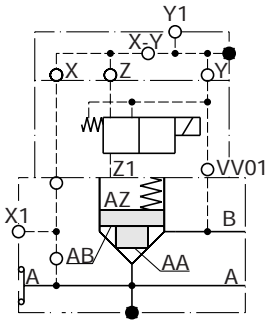	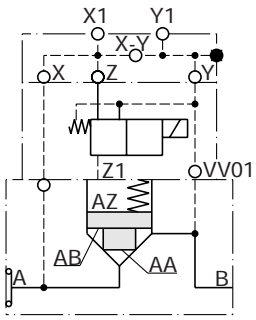	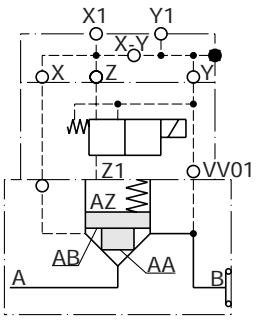	de-energized: open 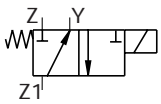 de-energized: closed 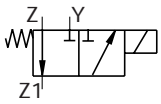

D5S 2-port

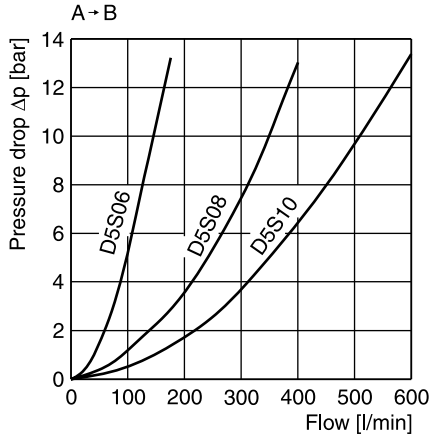

Leakage

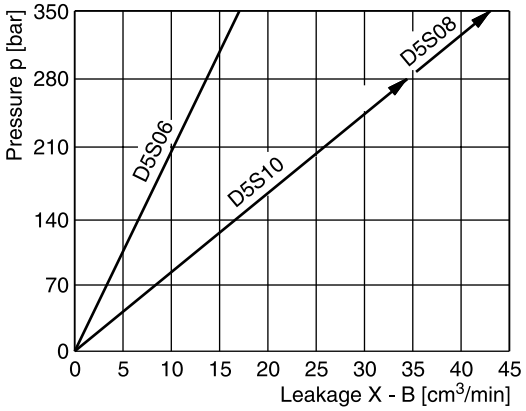

D5S 3-port

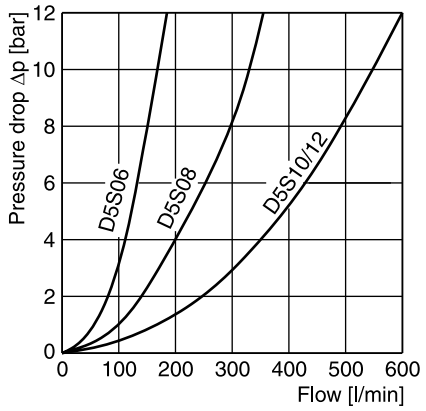

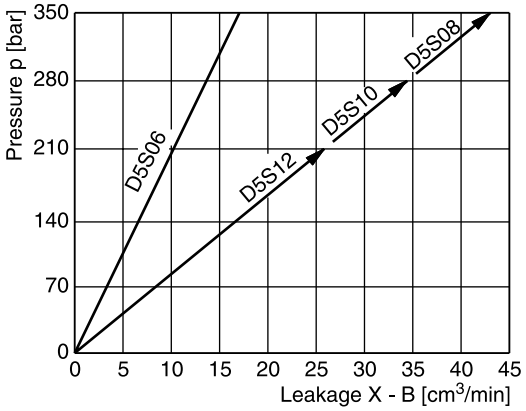

9

All characteristic curves measured with HLP46 at 50 °C.

Selection of cartridges

Sleeve 1, poppet 1	Sleeve 1, poppet 2	Sleeve 1, poppet 4	Sleeve 3, poppet 4	Sleeve 3, poppet A	Sleeve 3, poppet B/C
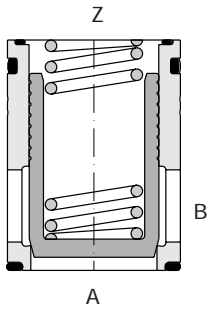	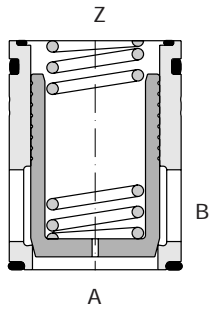	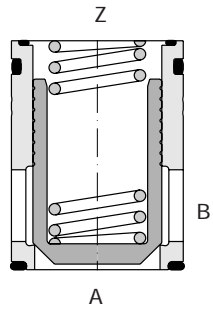	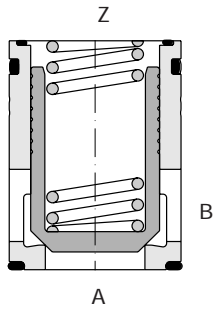	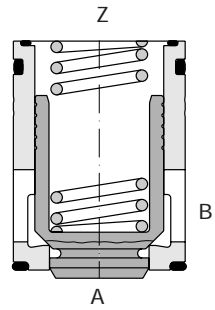	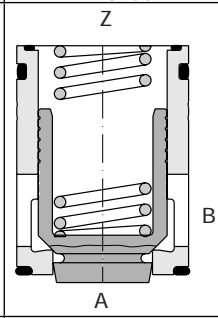
1 : 1.05 $A_A = 0.95\ A_C$ $A_B = 0.05\ A_C$ 15° chamfer	1 : 1.05 $A_A = 0.95\ A_C$ $A_B = 0.05\ A_C$ 15° chamfer orifice	1 : 1.05 $A_A = 0.95\ A_C$ $A_B = 0.05\ A_C$ 45° chamfer	1 : 1.67 $A_A = 0.6\ A_C$ $A_B = 0.4\ A_C$ 45° chamfer	1 : 1.67 $A_A = 0.6\ A_C$ $A_B = 0.4\ A_C$ 45° chamfer safety spool	1 : 1.67 $A_A = 0.6\ A_C$ $A_B = 0.4\ A_C$ 45° chamfer throttle spool

D5S 2-port

Seat entry

Annular entry

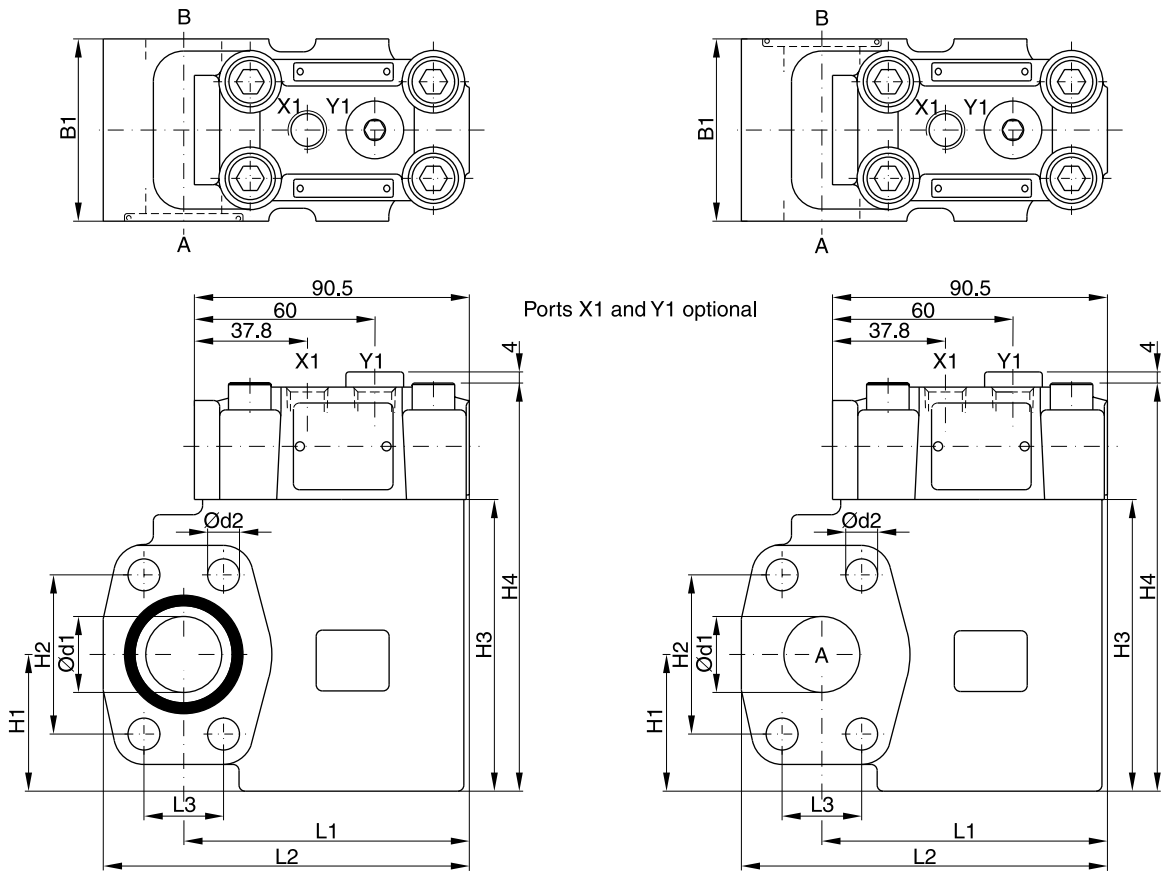

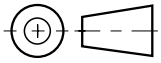

9

Seal kits		
NG	NBR	FPM
06	S16-91850-0	S16-91850-5
08	S16-91851-0	S16-91851-5
10	S16-91852-0	S16-91852-5

NG	l1	l2	l3	b1	h1	h2	h3	h4	d1	d2
06	77	101.0	22.2	60	37	47.6	90	127.6	19	10.5
08	94	120.5	26.2	60	45	52.4	96	133.6	25	10.5
10	94	128.0	30.2	75	48	58.7	109	146.6	32	12.5

Ports	Function	Port size		
		D5S06	D5S08	D5S10
A	Inlet or outlet	¾" SAE61	1" SAE61	1¼" SAE61
B	Outlet or inlet	¾" SAE61	1" SAE61	1¼" SAE61
X1	External pilot port	G¼"	G¼"	G¼"
Y1	External pilot drain	G¼"	G¼"	G¼"

D5S UK.INDD CM 29.08.13

D5S 3-port

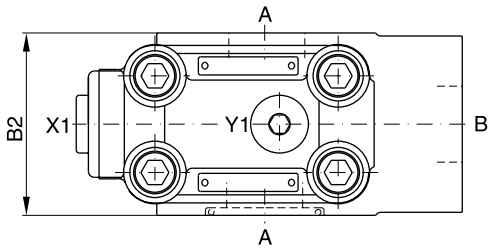

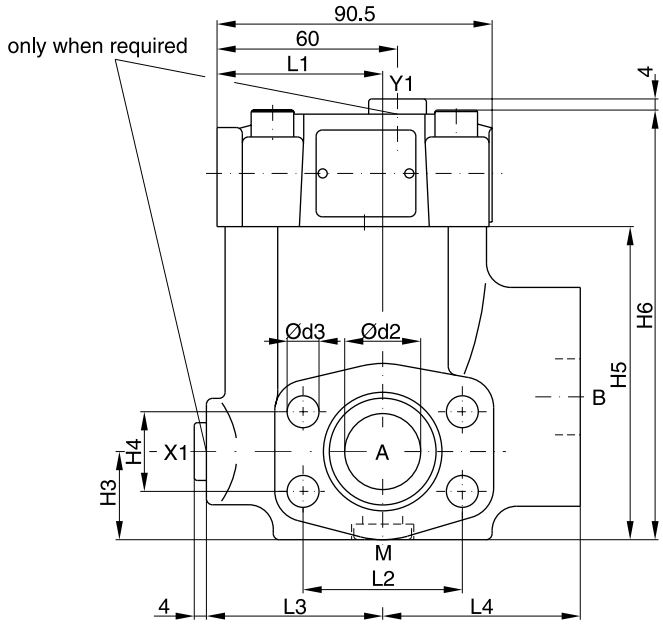

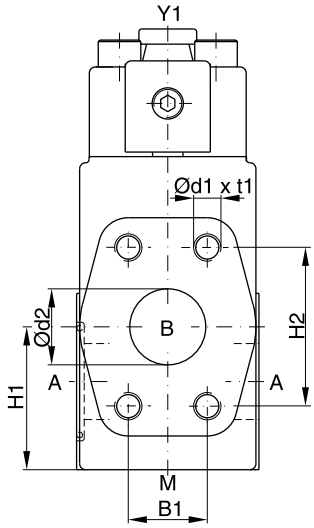

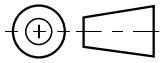

9

Seal kits		
NG	NBR	FPM
06	S16-91850-0	S16-91850-5
08	S16-91851-0	S16-91851-5
10	S16-91852-0	S16-91852-5
12	S26-27421-0	S26-27421-5

NG	l1	l2	l3	l4	b1	b2	h1	h2	h3	h4	h5	h6	d1	t1	d2	d3
06	49	47.6	56	63	22.2	60	41	47.6	29.5	22.2	82	119	3/8" UNC	20	19	10.5
08	55	52.4	58	65	26.2	60	47	52.4	30.5	26.2	103	141	3/8" UNC	23	25	10.5
10	57	58.7	64	61	30.2	75	65	58.7	37.5	30.2	113	150	7/16" UNC	22	32	12.5
12	37	69.8	55	93	35.7	80	73	69.8	35.5	35.7	140	178	1/2" UNC	27	38	13.5

Ports	Function	Port size			
		D5S06	D5S08	D5S10	D5S12
A (2x)	Inlet or outlet	¾" SAE61	1" SAE61	1¼" SAE61	1½" SAE61
B	Outlet or inlet	¾" SAE61	1" SAE61	1¼" SAE61	1½" SAE61
X1 [1)]	External pilot port	G¼"	G¼"	G¼"	G¼"
Y1	External pilot drain	G¼"	G¼"	G¼"	G¼"
M	Pressure gauge	G¼"	G¼"	G¼"	G¼"

[1)] Closed when supplied

D5S UK.INDD CM 29.08.13

Example: pilot oil external from X1, pilot drain internal out of B

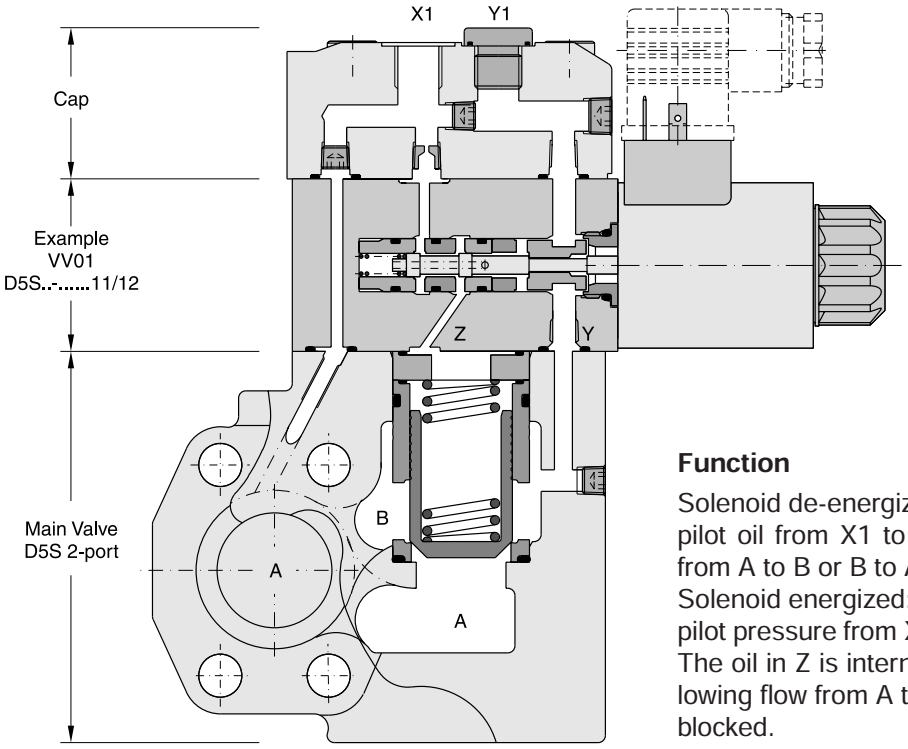

Function

Solenoid de-energized:
pilot oil from X1 to Z blocks the connection from A to B or B to A.
Solenoid energized:
pilot pressure from X1 is blocked in the VV01. The oil in Z is internally drained to port B. Allowing flow from A to B, while B to A remains blocked.

D5S with VV01 dimensions

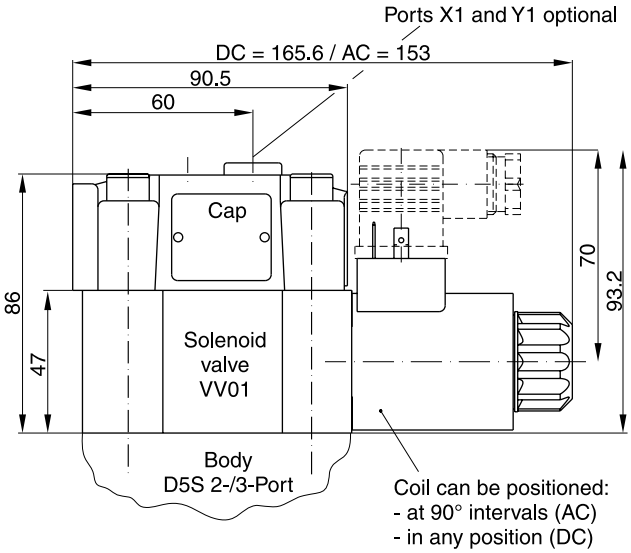

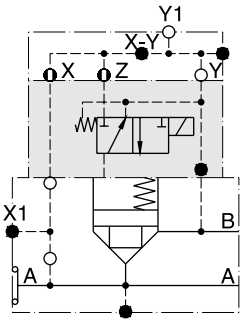

with manual override | without manual override

D5S..-.....09/10
Solenoid energized:
Blocked flow from A to B or B to A.
Solenoid de-energized:
Free flow from A to B or B to A.

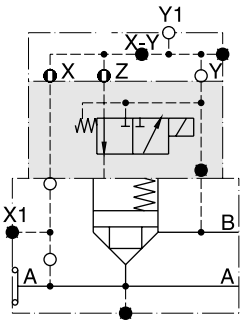

with manual override | without manual override

D5S..-.....11/12
Solenoid energized:
Free flow from A to B or B to A.
Solenoid de-energized:
Blocked flow from A to B or B to A.

Seal kits	
NBR	**FPM**
DC solenoid	
S56-40609-0	S56-40609-5
AC solenoid	
S26-35237-0	S26-35237-5

9

D5S UK.INDD CM 29.08.13

D5S with position control

Position control by proximity switch (incl. amplifier). Valve open: proximity switch activated. This proximity switch is pressure proof and has no wearing parts.

Note: Position control for D5S08 and D5S10 only.

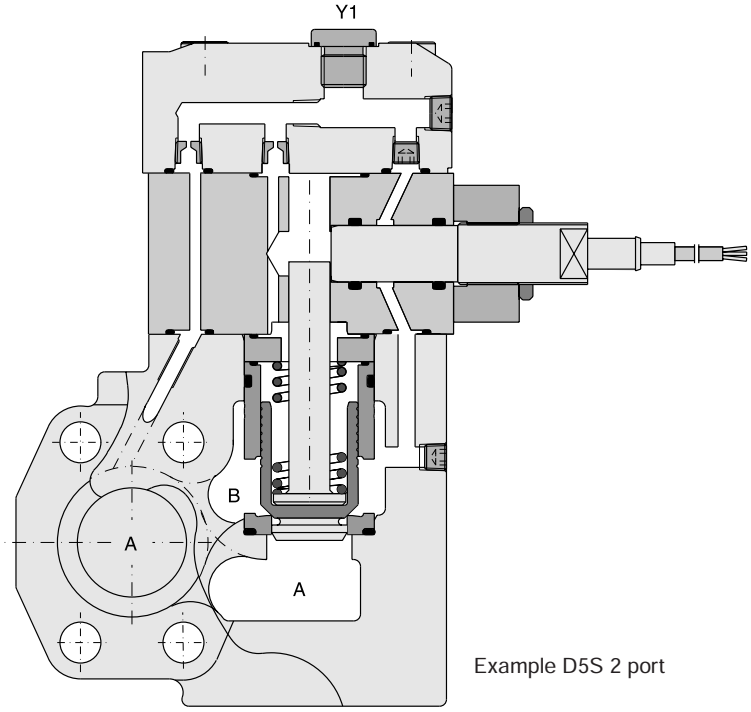

Example D5S 2 port

D5S with position control dimensions

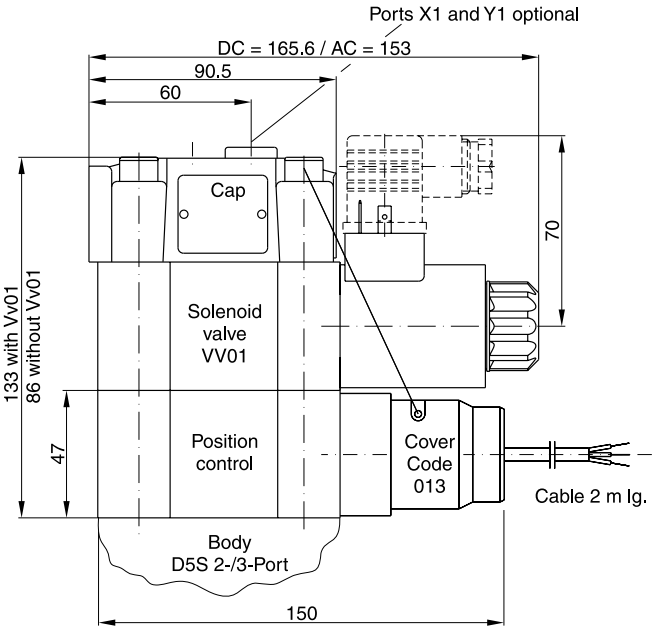

Technical data (proximity switch)

Function		PNP, contact
Supply voltage (Us)	[VDC]	10...30
Supply voltage ripple	[%]	≤ 10
Current consumption	[mA]	max. 8
Residual voltage L-signal	[V]	Us - 2.2 at I_{max}
Output current (I)	[mA]	≤ 200
Protection class		IP67
Ambient temperature	[C°]	-25...+70
Wire cross section	[mm²]	3 x 0.5

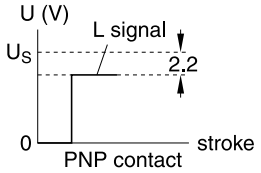

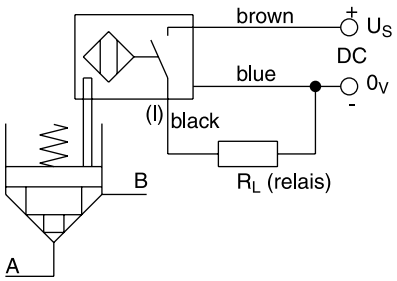

D5S stroke limiter

Example: D5S 3-port

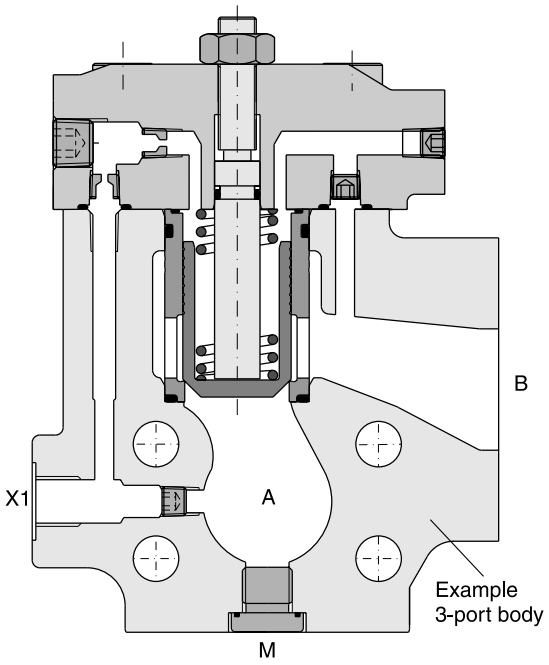

X1 = external pilot-oil (optional)

Note:

Stroke limiter not for use with D5S06, solenoid valve VV01, shuttle valve and position control.

Stroke limiter dimensions

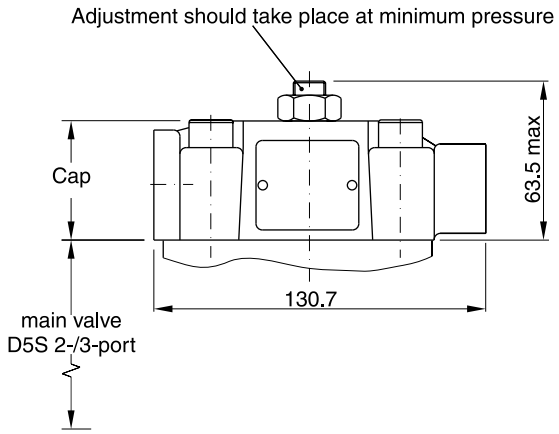

Example D5S 2-port:
D5S08-74C...
D5S10-74C...

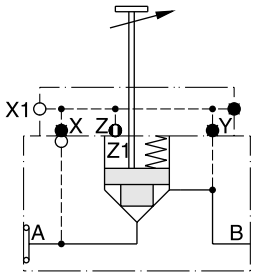

Example D5S 3-port:
D5S08-54A...
D5S10-54A...
D5S12-54A...

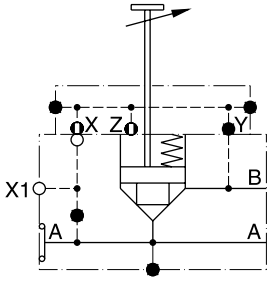

D5S with shuttle valve

Dimensions

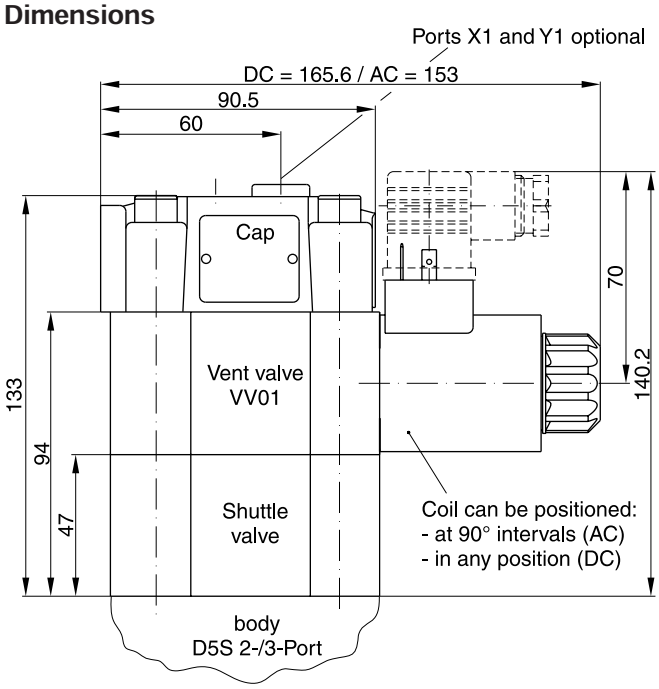

Shuttle valve only in connection with vent valve VV01.

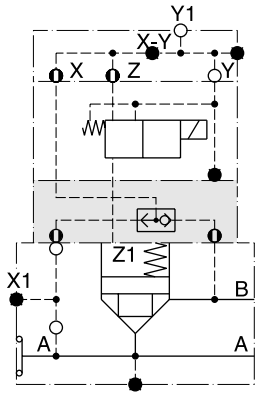

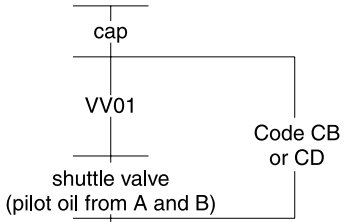

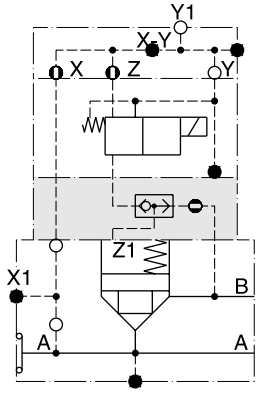

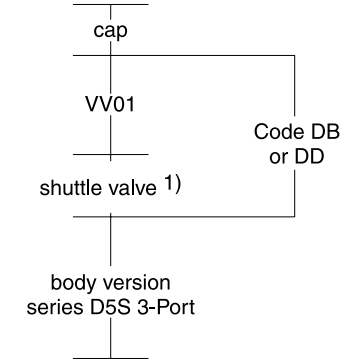

1) pilot oil from A and B, from B to A check valve function

9

D5S 2-port

Seat entry

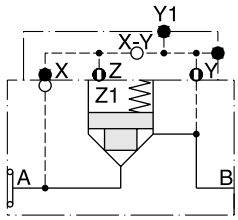

D5S..-722

Pilot oil: internal from B

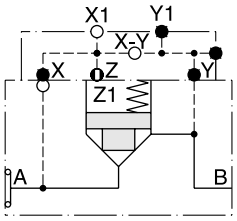

D5S..-743

Pilot oil: external from X1

Annular entry

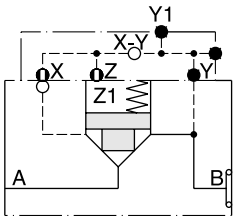

D5S..-821

Pilot oil: internal from B

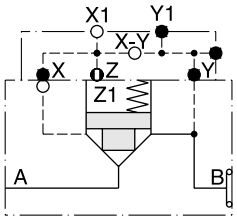

D5S..-843

Pilot oil: external from X1

Stroke limiter D5S 2-port

Seat entry

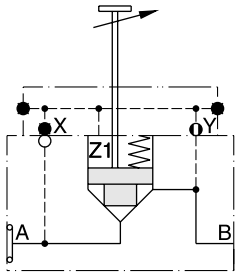

D5S08-72B
10
Pilot oil: internal from B

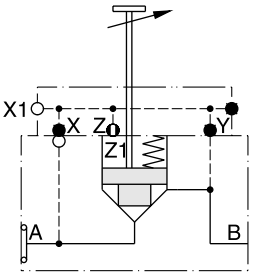

D5S08-74C
10
Pilot oil: external from X1

Annular entry

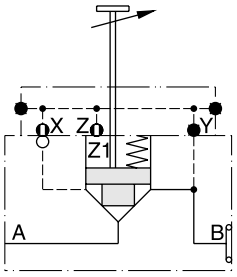

D5S08-82A
10
Pilot oil: internal from B

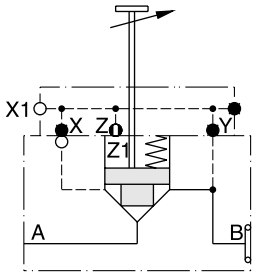

D5S08-84C
10
Pilot oil: external from X1

D5S 3-port

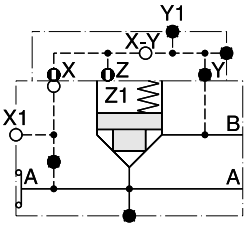

D5S .. -541

Pilot oil: external from X1

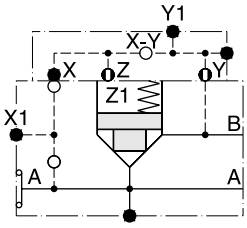

D5S .. -522

Pilot oil: internal from B

Stroke limiter D5S 3-port

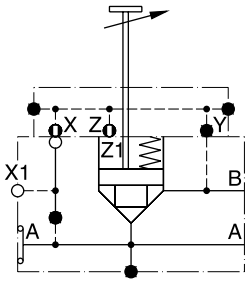

D5S08-54A
10
12
Pilot oil: external from X1

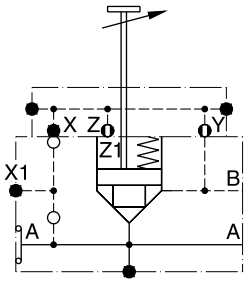

D5S08-52B
10
12
Pilot oil: internal from B

9

D5S 2-port with solenoid valve VV01

Seat entry

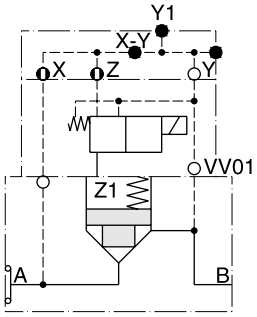

D5S..-714...09
10
11
12
Pilot oil: internal from A
Pilot drain: internal to B

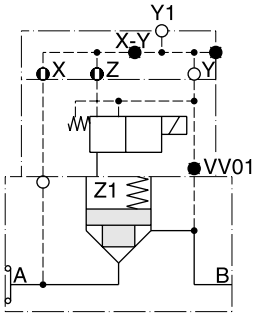

D5S..-716...09
10
11
12
Pilot oil: internal from A
Pilot drain: external out of Y1

Annular entry

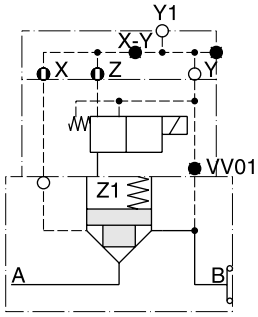

D5S..-826...09
10
11
12
Pilot oil: internal from B
Pilot drain: external out of Y1

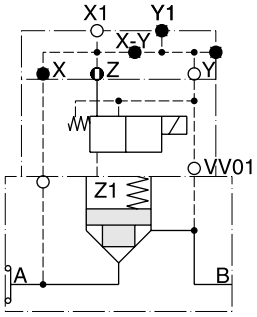

D5S..-745...09
10
11
12
Pilot oil: internal from X1
Pilot drain: internal to B

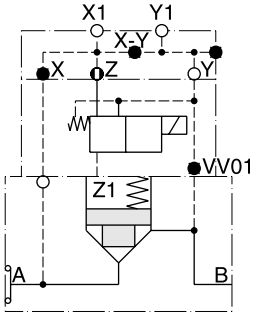

D5S..-747...09
10
11
12
Pilot oil: internal from X1
Pilot drain: external out of Y1

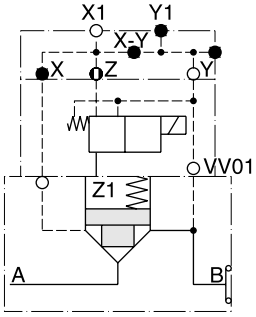

D5S..-845...09
10
11
12
Pilot oil: internal from X1
Pilot drain: internal to B

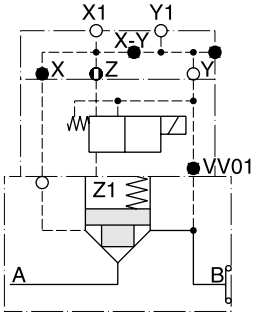

D5S..-847...09
10
11
12
Pilot oil: internal from X1
Pilot drain: external out of Y1

D5S 2-port with with solenoid valve VV01 and shuttle valve

Seat entry

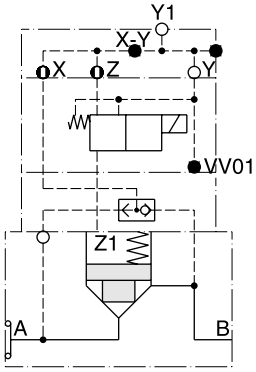

D5S..-736...CB
CD
Pilot oil: internal from A + internal from B
Pilot drain: external out of Y1

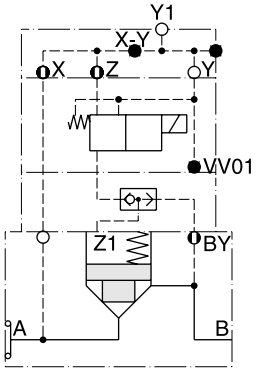

D5S..-736...DB
DD
Pilot oil: internal from A + internal from B
Pilot drain: external out of Y1

Annular entry

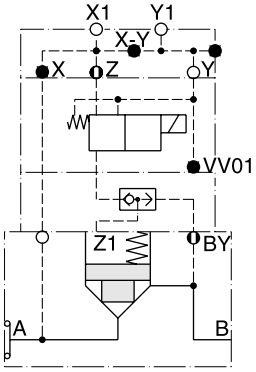

D5S..-757...DB
DD
Pilot oil: external from X1 + internal from B
Pilot drain: external out of Y1

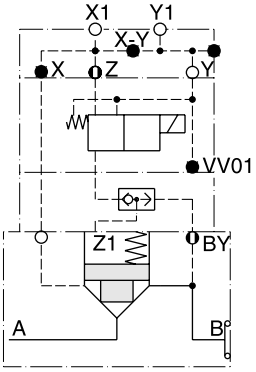

D5S..-857...DB
DD
Pilot oil: external from X1 + internal from B
Pilot drain: external out of Y1

D5S 3-port with solenoid valve VV01

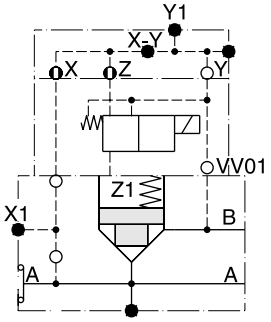

D5S .. -514...09
10
11
12
Pilot oil: internal from A
Pilot drain: internal to B

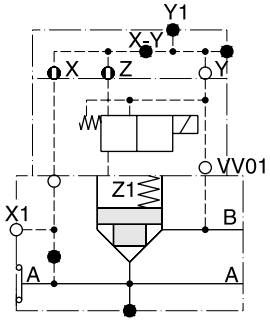

D5S .. -544...09
10
11
12
Pilot oil: external from X1
Pilot drain: internal to B

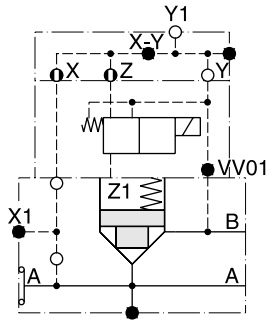

D5S .. -516...09
10
11
12
Pilot oil: internal from A
Pilot drain: external out of Y1

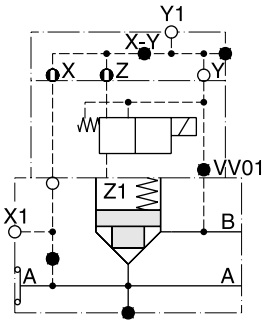

D5S .. -546...09
10
11
12
Pilot oil: external from X1
Pilot drain: external out of Y1

9

D5S 3-port with with solenoid valve VV01 and shuttle valve

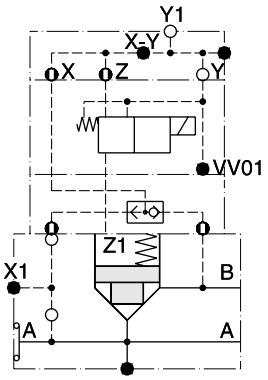

D5S .. -536...CB
CD
Pilot oil: internal from A + internal from B
Pilot drain: external out of Y1

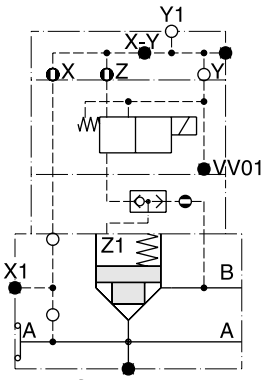

D5S .. -536...DB
DD
Pilot oil: internal from A + internal from B
Pilot drain: external out of Y1

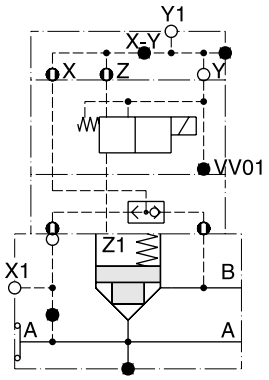

D5S .. -556...CB
CD
Pilot oil: internal from X1 + internal from B
Pilot drain: external out of Y1

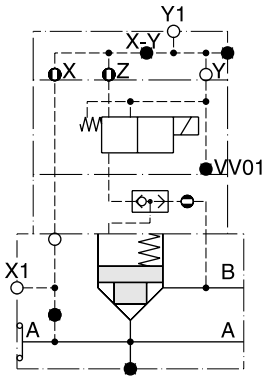

D5S .. -556...DB
DD
Pilot oil: external from X1 + internal from B
Pilot drain: external out of Y1

D5S 2-port position control

Seat entry

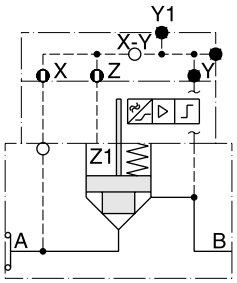

D5S08-7113A.BA
D5S10
Pilot oil: internal from A

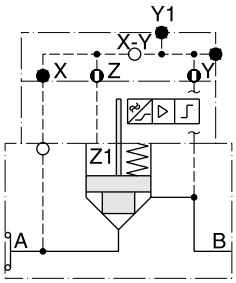

D5S08-7223A.BA
D5S10
Pilot oil: internal from B

Annular entry

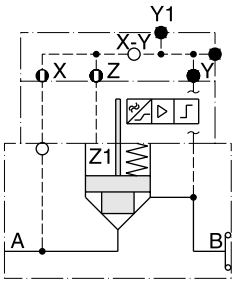

D5S08-8213A.BA
D5S10
Pilot oil: internal from B

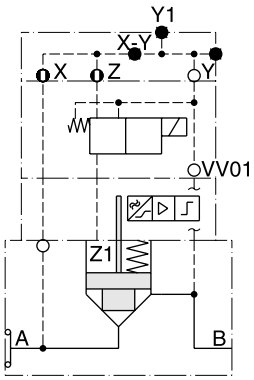

D5S08-7143A.BC
D5S10 BE
Pilot oil: internal from A
Pilot drain: internal to B

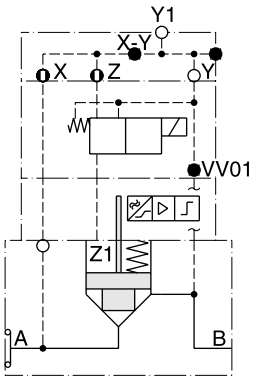

D5S08-7163A.BC
D5S10 BE
Pilot oil: internal from A
Pilot drain: external out of Y1

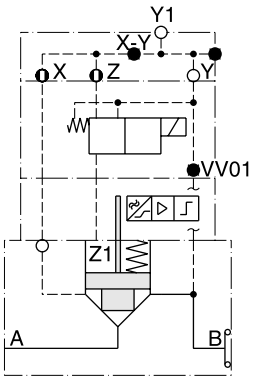

D5S08-8263A.BC
D5S10 BE
Pilot oil: internal from B
Pilot drain: external out of Y1

9

Seat entry

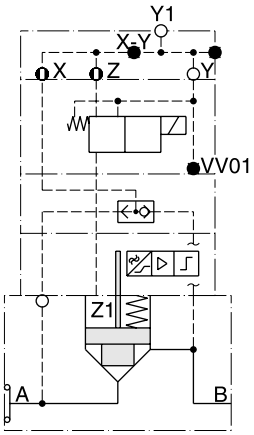

D5S..-736...BH
BK
Pilot oil: internal from A + internal from B
Pilot drain: external out of Y1

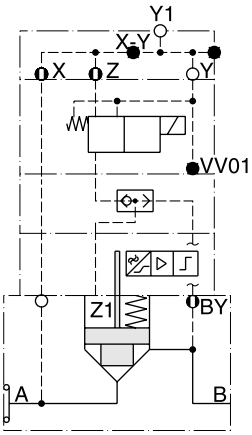

D5S..-736...BN
BQ
Pilot oil: internal from A + internal from B
Pilot drain: external out of Y1

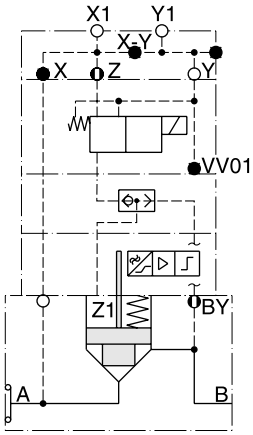

D5S..-757...BN
BQ
Pilot oil: external from X1 + internal from B
Pilot drain: external out of Y1

Annular entry

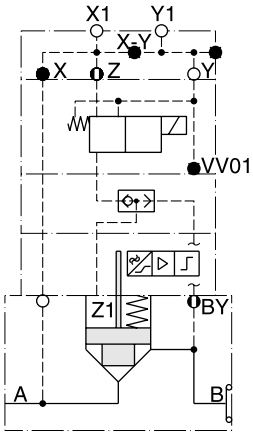

D5S..-857...BN
BQ
Pilot oil: external from X1 + internal from B
Pilot drain: external out of Y1

D5S 3-port position control

Seat entry

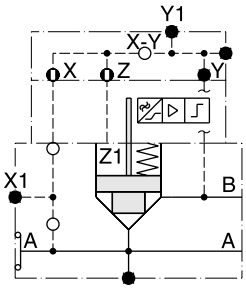

D5S08-5113A.BA
10
12
Pilot oil: internal from A

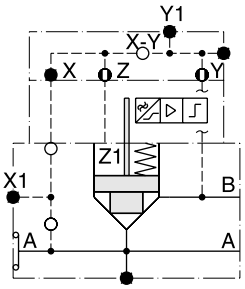

D5S08-5223A.BA
10
12
Pilot oil: internal from B

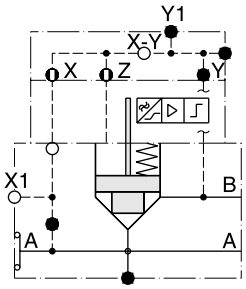

D5S08-5213A.BA
10
12
Pilot oil: external from X1

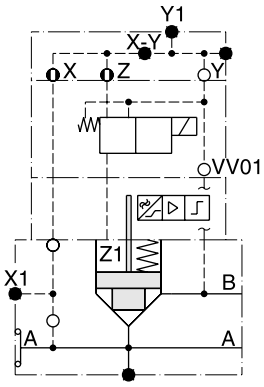

D5S08-5143A.BC
10 BE
12
Pilot oil: internal from A
Pilot drain: internal to B

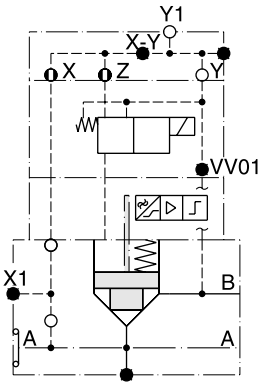

D5S08-5163A.BC
10 BE
12
Pilot oil: internal from A
Pilot drain: external out of Y1

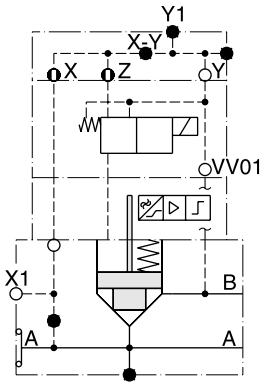

D5S08-5443A.BC
10 BE
12
Pilot oil: external from X1
Pilot drain: internal to B

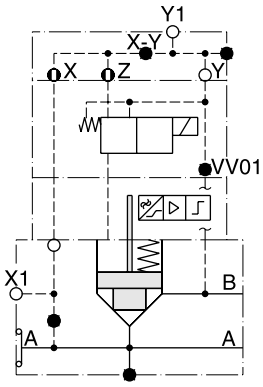

D5S08-5463A.BC
10 BE
12
Pilot oil: external from X1
Pilot drain: external out of Y1

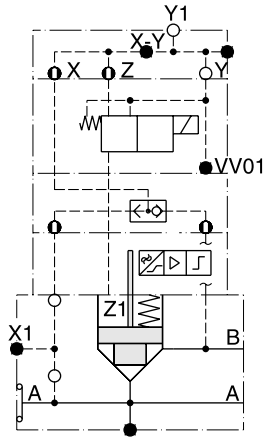

D5S08-5363A.BH
10 BE
12
Pilot oil: internal from A +
internal from B
Pilot drain: external out of Y1

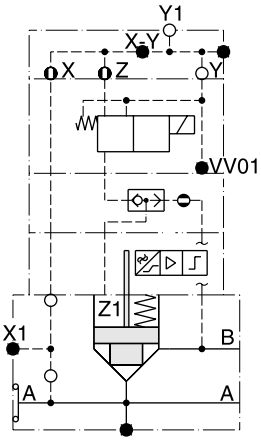

D5S08-5363A.BN
10 BQ
12
Pilot oil: internal from A +
internal from B
Pilot drain: external out of Y1

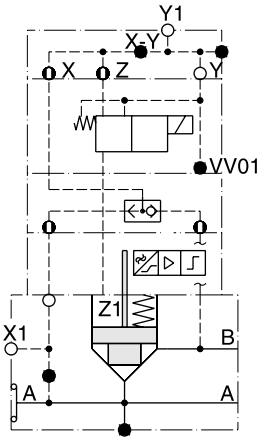

D5S08-5563A.BH
10 BK
12
Pilot oil: external from X1 +
internal from B
Pilot drain: external out of Y1

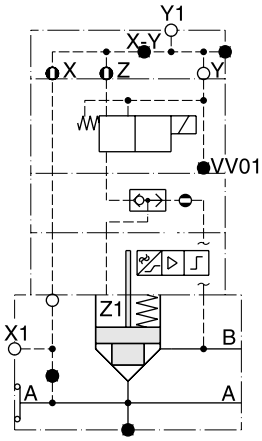

D5S08-5563A.BN
10 BQ
12
Pilot oil: external from X1 +
internal from B
Pilot drain: external out of Y1

Proportional throttle valves series F5C allow to adjust the flow in proportion to the input signal. The combination of the F5C with pressure compensators R5A or R5P serves as a flow control valve - providing load compensated flow.

The F5C is offered with two types of response time:

standard	350 ms at 1 l/min pilot flow
code A	250 ms at 2 l/min pilot flow

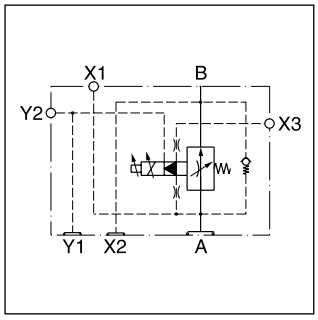

Features

- Spool type proportional throttle valve
- SAE61 flange
- Maximum flow 380 l/min
- 3 sizes, SAE 3/4", 1", 1 1/4"
- Load compensated flow in combination with R5A and R5P

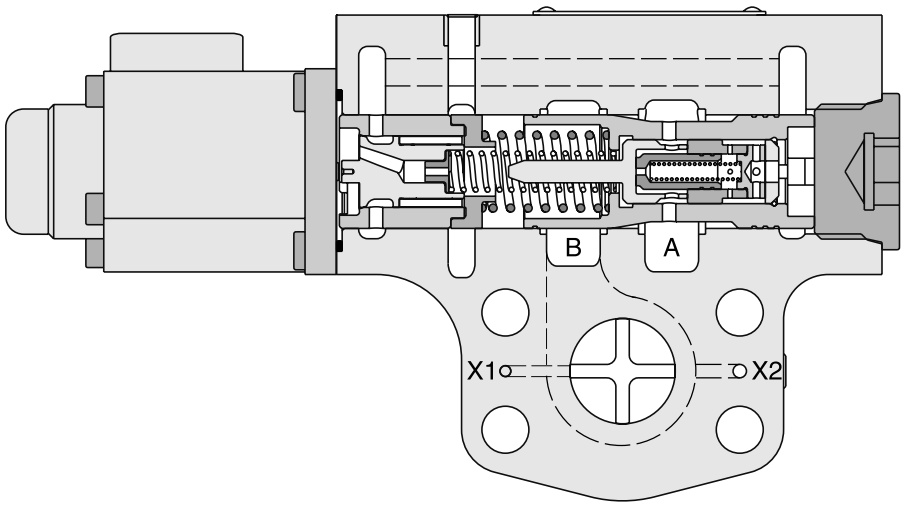

Ordering Code

F5C			4	3		X		0	C			
Proportional throttle valve	**Nominal size**	**Pilot flow and response**	**SAE61 interface**	**Pilot ports G¼"**	**Spool type**	**Proportional solenoid 16 V/1.05 A**	**Pilot connection**	**Accessories**	**Design**	**Seals**	**Design series** (not required for ordering)	**Options**

Code	Nominal size
06	SAE ¾"
08	SAE 1"
10	SAE 1¼"

Code	Pilot flow	Max. response
—	1 l/min	350 ms
A	2 l/min	250 ms

Spool type		
Code	Size	Max. flow [1]
A	06	23 l/min
B	06/08	45 l/min
1	06/08/10	95 l/min
2	08/10	190 l/min
3	10	380 l/min

Code	Seals
1	NBR
5	FPM

Code	Pilot connections	F5C without compensators R5A, R5P	F5C for combination with R5A	F5C for combination with R5P
2	internal PD (Y) internal PP (X)	—	—	X1, X3, Y2 ● X2, Y1 ○ X2, Y1 ○
3	external PD (Y) external PP (X)	—	X1, X3, Y2 ○ X2, Y1 ⊗	—
4	external PD (Y) external PP (X)	X3, Y2 ○ X1 ● X2, Y1 ⊗	—	X2, X3, Y1, Y2 ○ X1 ●
5	external PD (Y) internal PP (X)	—	X1, Y2 ○ X3 ● X2, Y1 ⊗	—
6	external PD (Y) internal PP (X)	X1, X3 ● X2, Y1 ⊗ Y2 ○	—	X1, X3 ● X2, Y1, Y2 ○

[1] At nominal pressure drop (Δp = 8.4 bar)

9

Pilot connection explanation

F5C with R5A

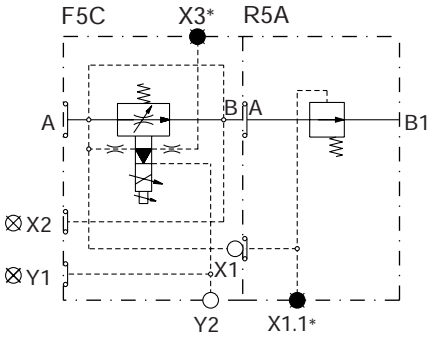

F5C with R5P

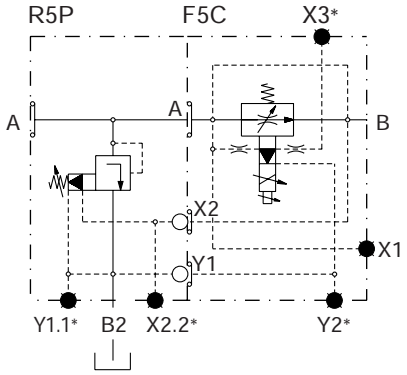

* optional ○ open ● closed ⊗ closed by counterpart

Technical data

General				
Size		06 (¾")	08 (1")	10 (1¼")
Mounting		Flanged according to SAE61		
Mounting position		unrestricted		
Ambient temperature	[°C]	-20...+50		
Weight	[kg]	3.9	4.1	5.8
Hydraulic				
Max. operating pressure				
Ports A, B, X1, X2, X3	[bar]	350	300	280
Ports Y1, Y2	[bar]	70		
Max. pressure drop (from A to B)	[bar]	21		
Nominal flow	[l/min]	95	190	380
Fluid		Hydraulic oil according to DIN 51524...51525		
Fluid temperature	[°C]	-20...+80		
Viscosity permitted	[cSt] / [mm²/s]	10...650		
Viscosity recommended	[cSt] / [mm²/s]	30		
Filtration		ISO 4406 (1999); 18/16/13		
Electrical characteristics				
Duty ratio		100 % ED; CAUTION: coil temperature up to 150 °C possible		
Solenoid connection		Connector as per EN175301-803, solenoid identification as per ISO 9461		
Protection class		IP65 in accordance with EN 60529 (with correctly mounted plug-in connector)		
Supply voltage	[V]	16		
Current consumption	[A]	1.05		
Resistance	[Ohm]	11.3		
Response time	[ms]	see ordering code		

Characteristic curves

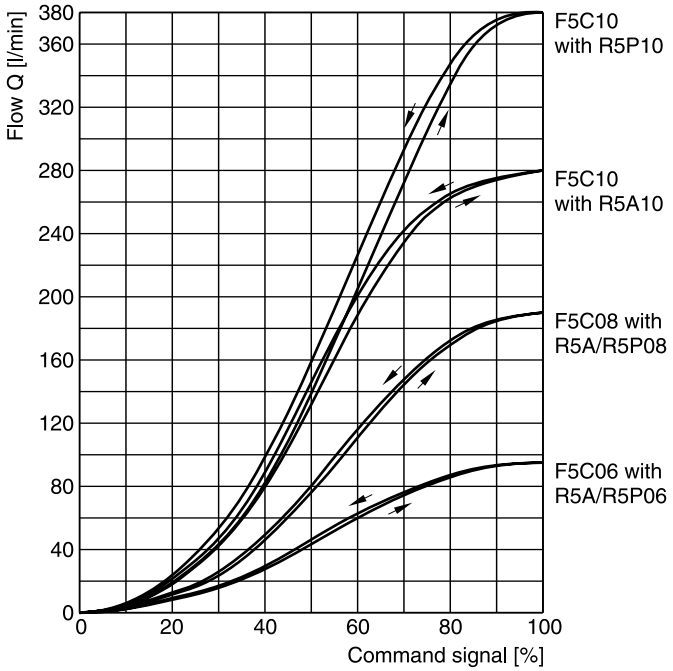

All characteristic curves measured with HLP46 at 50 °C.

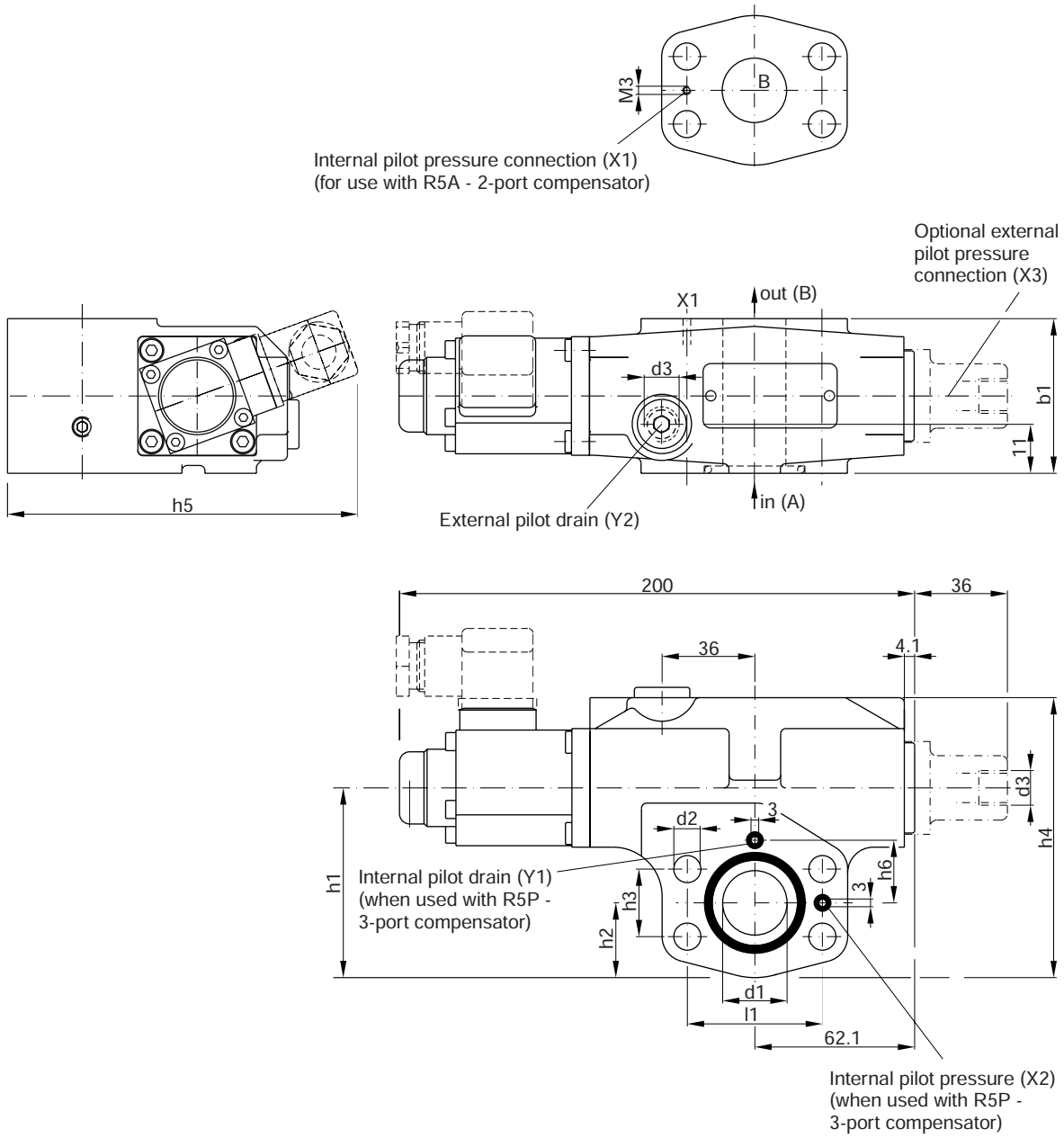

Seal kits		
NG	NBR	FPM
06 / 08 / 10	S26-58484-0	S26-58484-5

	l1	b1	h1	h2	h3	h4	h5	h6	d1	d2	d3
F5C06	47.6	60	68.2	26	22.2	103.2	183	20.8	19	10.5	G¼"
F5C08	52.4	60	73.6	29	26.2	108.6	187	24.3	25	10.5	G¼"
F5C10	58.7	75	83.5	36.5	30.2	118.5	198	29.3	32	12.5	G¼"

Direct operated 2 way pressure compensators series R5A can be combined with any type of fixed or adjustable flow resistor (throttle) to provide a load compensated flow.

The combination with the proportional throttle valve F5C serves as a compact 2 way flow control unit in SAE flange design. The R5A is typically used as meter-out compensator behind the flow resistor.

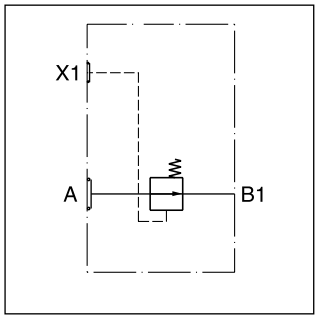

Features

- Seated type 2 way pressure compensator
- SAE61 flange
- 8.4 bar control pressure
- 3 sizes, SAE 3/4", 1", 1 1/4"
- Load compensated flow in combination with F5C

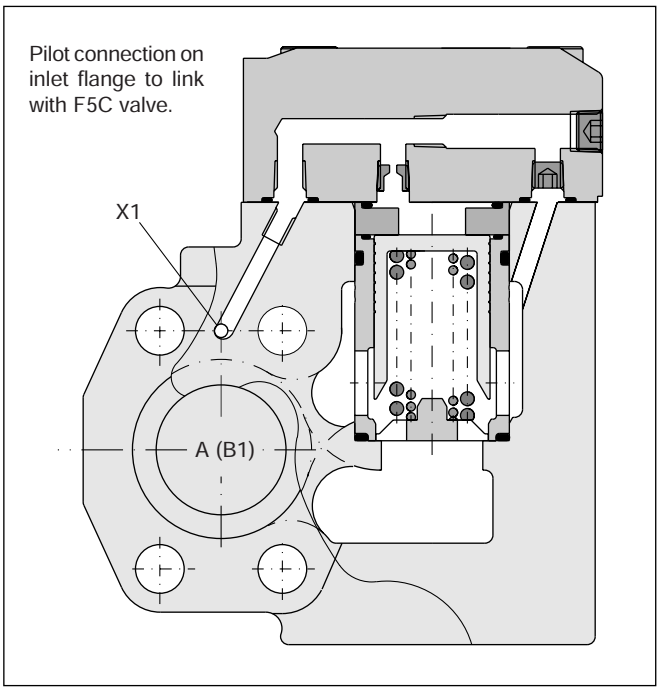

Ordering code

R5A	☐	–	☐	4	1	01	B	☐	☐
2-port compensator	Nominal size		SAE61 interface	2-port body	Plain cap	Pilot connection thru port X1	Design series	Seals	Options

Code	Nominal size
06	SAE ¾"
08	SAE 1"
10	SAE 1¼"

SAE 61 interface		
Code	Size	Max. pressure [bar]
4	10	280
5	06/08	350

Code	Seals
1	NBR
5	FPM

Technical data

General			
Size	06 (¾")	08 (1")	10 (1¼")
Mounting	Flanged according to SAE61		
Mounting position	unrestricted		
Ambient temperature [°C]	-20...+50		
$MTTF_D$ value [years]	150		
Weight [kg]	3.6	4.3	5.6
Hydraulic			
Max. operating pressure [bar]			
Ports A, B, X1	350	350	280
Control pressure [bar]	8.4		
Nominal flow [l/min]	90	300	600
Fluid	Hydraulic oil according to DIN 51524...51525		
Fluid temperature [°C]	-20...+80		
Viscosity permitted [cSt] / [mm^2/s]	10...650		
Viscosity recommended [cSt] / [mm^2/s]	30		
Filtration	ISO 4406 (1999); 18/16/13		

Dimensions

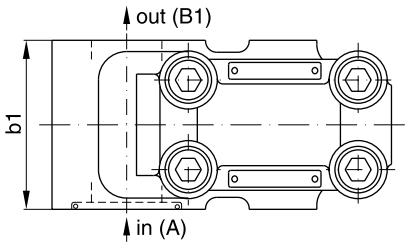

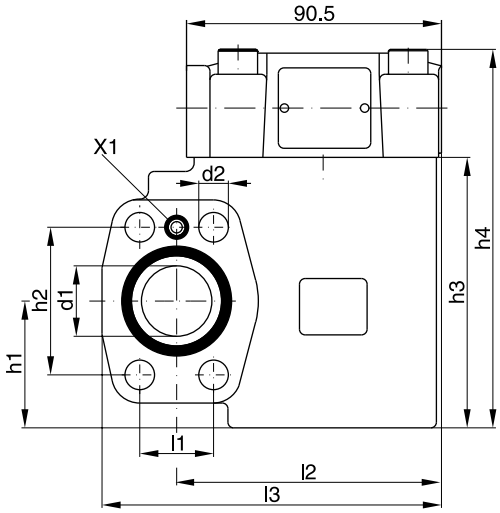

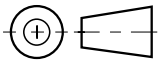

Seal kits		
NG	**NBR**	**FPM**
06	S16-91458-0	S16-91458-5
08	S16-91457-0	S16-91457-5
10	S16-91456-0	S16-91456-5

	l1	l2	l3	b1	h1	h2	h3	h4	d1	d2
R5A06	22.2	84	108	60	37	47.6	90	128	19	10.5
R5A08	26.2	101	128	60	45	52.4	96	134	25	10.5
R5A10	30.2	101	135	75	48	58.7	109	147	32	12.5

Direct operated 3 way pressure compensators series R5P can be combined with any type of fixed or adjustable flow resistor (throttle) to provide a load compensated flow.

The combination with the proportional throttle valve F5C serves as a compact 3 way flow control unit in SAE flange design. The R5P is typically used as meter-in compensator in front of the flow resistor.

The R5P is additionally equipped with a pressure relief pilot, that controls the compensator cartridge and operates as system pressure relief valve. The R5P*P2 provides a proportional relief function.

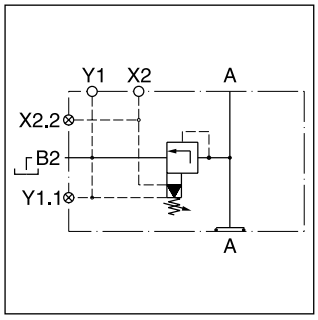

Features

- Seated type 3 way pressure compensator
- SAE61 flange
- 8.4 bar control pressure
- Pressure relief function (optionally proportional)
- With optional vent function
- 3 sizes, SAE 3/4", 1", 1 1/4"
- Load compensated flow in combination with F5C

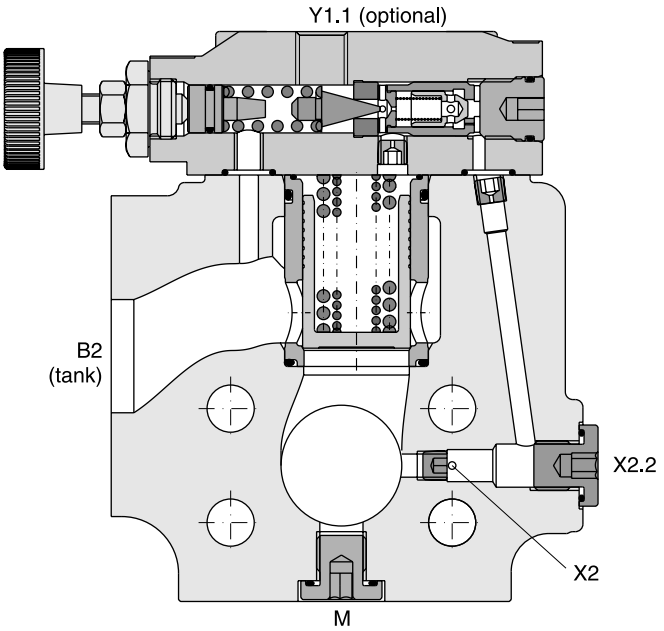

R5P

R5P	□	–	□	□	□	□	□	□	□	A	□	□
3-port compensator	Nominal size		SAE 61 Interface	Pilot ports	Pressure stages	Adjust-ment	Pilot connection	Switching type	Solenoid voltage	Design series	Seals	Options

Code	Port size
06	SAE ¾"
08	SAE 1"
10	SAE 1¼"

SAE61 interface		
Code	Size	Max. pressure [bar]
4	10	280
5	06/08	350

Code	Pilot ports	Port Y1 [1]
9	G¼"	plugged
P		open

Code	Pressure stages
1	7...105 bar
3	7...210 bar
5 [2]	7...350 bar

Code	Adjustment
1	Hand knob
3	Acorn nut with lead seal

Code	Seals [6]
1	NBR
5	FPM

Code	Solenoid voltage
omit	Standard w/o vent function
G0R	12 V=
G0Q	24 V=
GAR [5]	98 V=
GAG [5]	205 V=
W30	110 V / 50 Hz 120 V / 60 Hz
W31	230 V / 50 Hz 240 V / 60 Hz

Code	Switching type
omit	Standard w/o vent function
09	Solenoid not activated unpressure circulation
11	Solenoid activated unpressure circulation

Code	Pilot connection
2	internal PD internal PP [4]
6	external PD [3] internal PP [4]

9

[1] Y1 port is used in combination with F5C, when the F5C should be drained through the R5P (internal or external drain)
[2] R5P10-4*5 up to 280 bar
[3] Through port Y1.1
[4] PP through port X1 in outlet flange
[5] To be used in combination with rectifier plugs at 120 VAC/230 VAC power supply
[6] Further seals on request

R5P*P2

R5P	☐	–	☐	☐	☐	☐	☐	P2	G0R	A	☐	☐
3-port compensator	Nominal size		SAE 61 Interface	Pilot ports	Pressure stages	Adjust-ment	Pilot connection	Propor-tional pressure control	Solenoid voltage 12 V 2.3 A	Design series	Seals	Options

Code	Port size
06	SAE ¾"
08	SAE 1"
10	SAE 1¼"

SAE61 interface		
Code	Size	Max. pressure [bar]
4	10	280
5	06/08	350

Code	Pilot ports	Port Y1 [1]
9	G¼"	plugged
P		open

Code	Pressure stages
1	7...105 bar
3	7...210 bar
5 [2]	7...350 bar

Code	Seals [5]
1	NBR
5	FPM

Code	Pilot connection
2	internal PD internal PP [4]
6	external PD [3] internal PP [4]

Code	Adjustment
1	Hand knob
3	Acorn nut with lead seal

9

[1] Y1 port is used in combination with F5C, when the F5C should be drained through the R5P (internal or external drain)
[2] R5P10-4*5 up to 280 bar
[3] Through port Y1.1
[4] PP through port X1 in outlet flange
[5] Further seals on request

R5P

General								
Size				06 (¾")		08 (1")		10 (1¼")
Mounting				Flanged according to SAE61				
Mounting position				unrestricted				
Ambient temperature			[°C]	-20...+50				
$MTTF_D$ value			[years]	150				
Weight	R5P		[kg]	3.7		4.4		5.3
	R5P with VV01		[kg]	5.4		6.1		7.0
Hydraulic								
Max. operating pressure		Ports A, B	[bar]	350		350		280
Pressure stages			[bar]	105, 210, 350				
Nominal flow			[l/min]	90		300		600
Fluid				Hydraulic oil according to DIN 51524...51525				
Fluid temperature			[°C]	-20...+80				
Viscosity	permitted		[cSt] / [mm^2/s]	10...650				
	recommended		[cSt] / [mm^2/s]	30				
Filtration				ISO 4406 (1999); 18/16/13				
Electrical (solenoid) R5P with VV01								
Duty ratio				100 % ED; CAUTION: coil temperature up to 150 °C possible				
Solenoid connection				Connector as per EN175301-803, solenoid identification as per ISO 9461				
Protection class				IP65 in accordance with EN 60529 (with correctly mounted plug-in connector)				
			Code	G0R	G0Q	GAR	GAG	W30	W31
Supply voltage			[V] [V]	12 V =	24 V =	98 V =	205 V =	110 at 50 Hz 120 at 60 Hz	230 at 50 Hz 240 at 60 Hz
Tolerance supply voltage			[%]	±10	±10	±10	±10	±5	±5
Power consumption	hold		[W]	32.7	31	31.9	28.2	70 / 70 VA	70 / 70 VA
	in rush		[W]	32.7	31	31.9	28.2	280 / 290 VA	280 / 290 VA
Response time			[ms]	Energized / De-energized AC: 20/18 , DC: 46/27					
Wiring min.			[mm^2]	3 x 1.5 recommended					
Wiring length max.			[m]	50 recommended					

R5P*P2

General						
Size			06 (¾")		08 (1")	10 (1¼")
Mounting			Flanged according to SAE61			
Mounting position			unrestricted			
Ambient temperature		[°C]	-20...+50			
$MTTF_D$ value		[years]	75			
Weight		[kg]	5.5		6.2	7.1
Hydraulic						
Max. operating pressure	Ports A, B	[bar]	350		350	280
Pressure stages		[bar]	105, 210, 350			
Nominal flow		[l/min]	90		300	600
Fluid			Hydraulic oil according to DIN 51524...51525			
Fluid temperature		[°C]	-20...+80			
Viscosity	permitted	[cSt] / [mm^2/s]	10...650			
	recommended	[cSt] / [mm^2/s]	30			
Filtration			ISO 4406 (1999); 18/16/13			
Electrical (proportional solenoid)						
Duty ratio			100 % ED; CAUTION: coil temperature up to 150 °C possible			
Nominal voltage		[V]	12			
Max. current		[A]	2.3			
Coil resistance		[Ohm]	4 at 20 °C			
Solenoid connection			Connector as per EN175301-803, solenoid identification as per ISO 9461			
Protection class			IP65 in accordance with EN 60529 (with correctly mounted plug-in connector)			
Power amplifier			PCD00A-400			

R5P

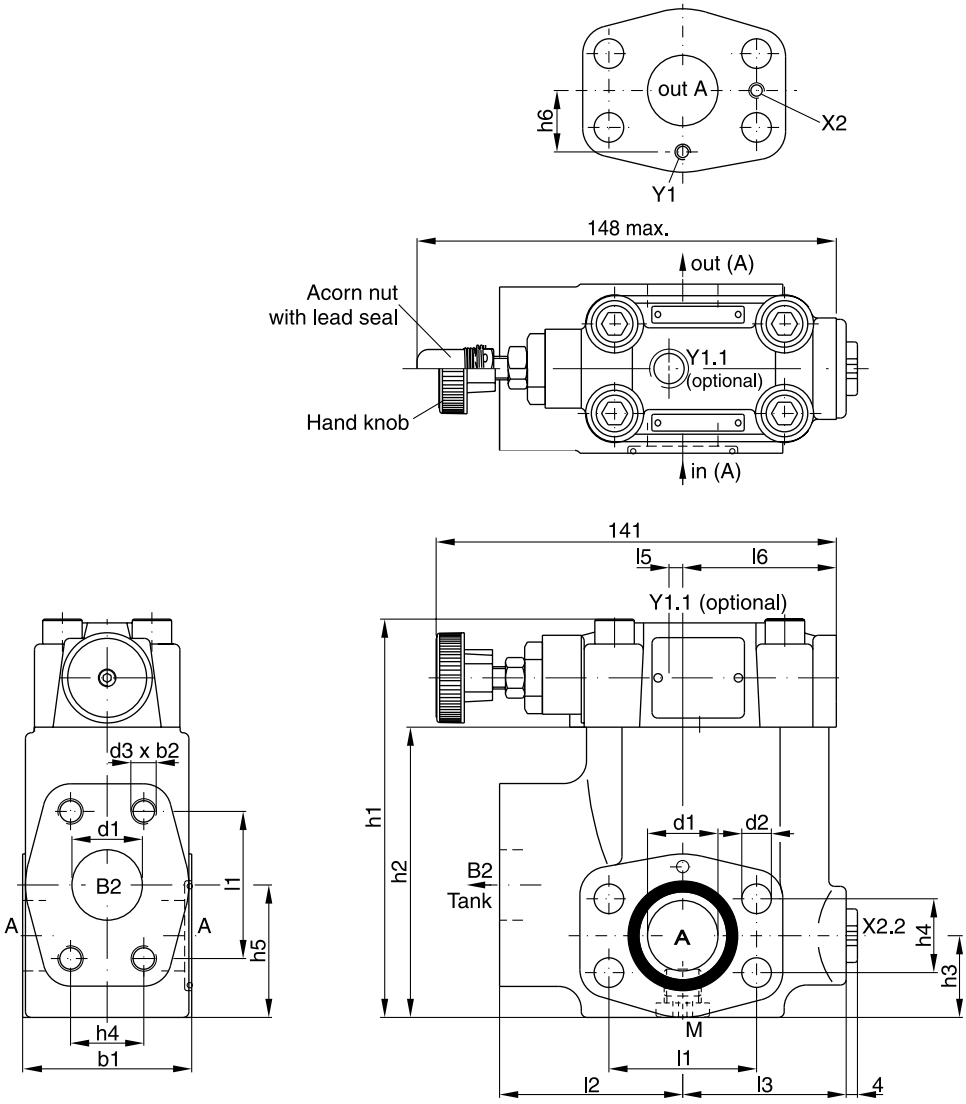

Seal kits		
NG	NBR	FPM
06	S16-91461-0	S16-91461-5
08	S16-91460-0	S16-91460-5
10	S16-91459-0	S16-91459-5

	l1	l2	l3	l4	l5	l6	b1	b2	h1	h2	h3	h4	h5	h6	d1	d2	d3
R5P06	47.6	63	56	148	1	49	60	20	119	81.6	29.5	22.2	41.6	20.8	19	10.5	3/8" UNC
R5P08	52.4	65	58	144.6	5	54.5	60	23	142	103	30.5	26.2	48.6	24.3	25	10.5	3/8" UNC
R5P10	58.7	61	62	146.6	3	56.5	75	22	149	111.5	37.5	30.2	64.1	29.3	32	12.5	7/16" UNC

Ports

Port	Function	Port size		
		R5P06	R5P08	R5P10
A	Inlet/outlet	¾"	1"	1¼"
B2	Tank	¾"	1"	1¼"
X2	Internal pilot pressure	M3	M3	M3
X2.2	External pilot pressure	G¼"	G¼"	G¼"
Y1	Internal pilot drain	M3	M3	M3
Y1.1	External pilot drain	G¼"	G¼"	G¼"
M	Pressure gauge	G¼"	G¼"	G¼"

R5P UK.INDD CM 18.07.13

R5P*P2

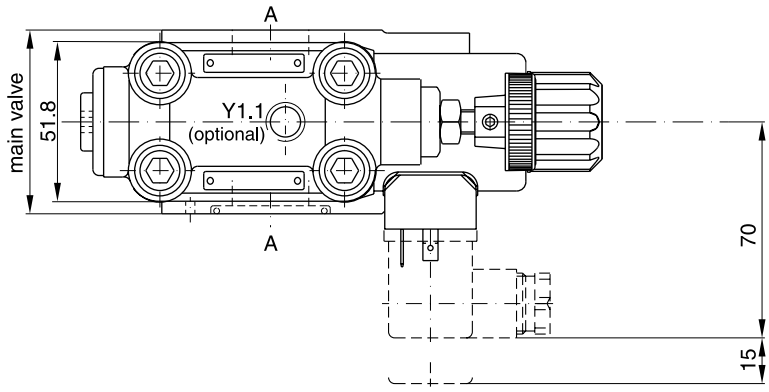

Drain line only external from the pilot head (Y1.1).

The pilot drain port must be connected to a stable low pressure tank line. Pressure variations in the drain port should be avoided.

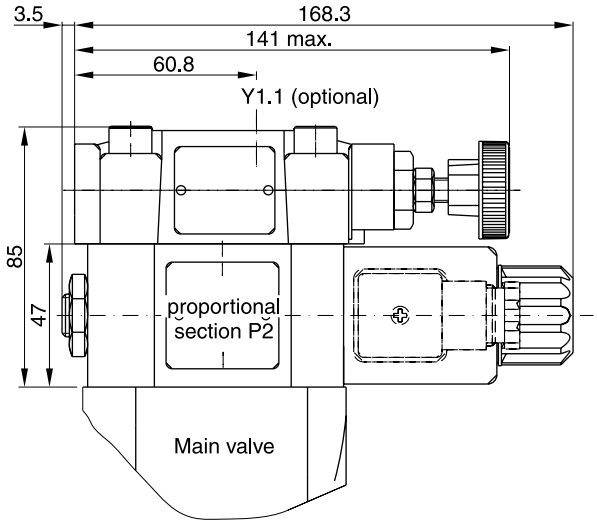

Note:

On initial start up and after long shut down periods bleed air from this plug.

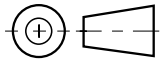

9

	Kit	
	NBR	FPM
Prop. section P2	S26-58473-0	S26-58473-5

R5P with vent function

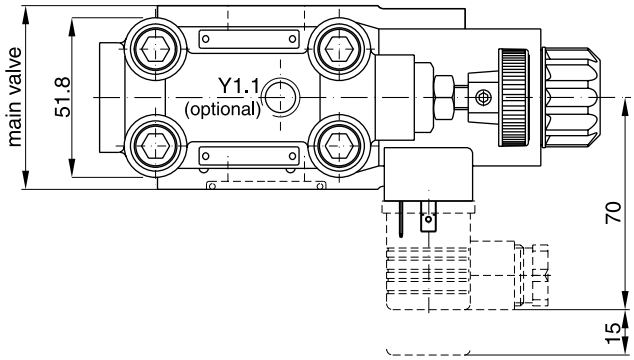

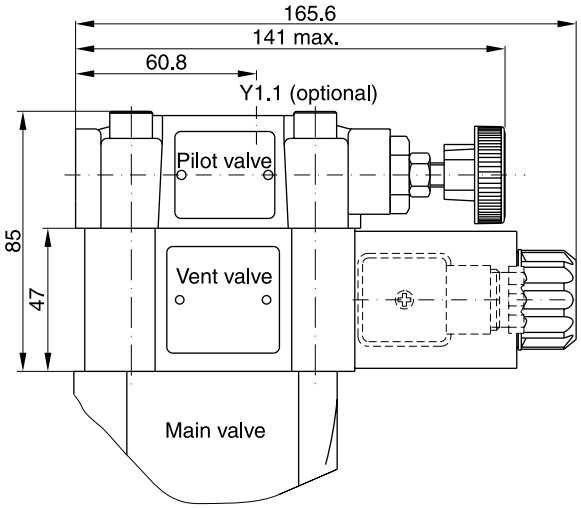

Seal kits	
NBR	**FPM**
DC solenoid	
S56-40609-0	S56-40609-5
AC solenoid	
S26-35237-0	S26-35237-5

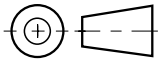

9

Code	Internal drain	External drain
11	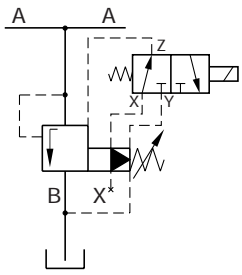	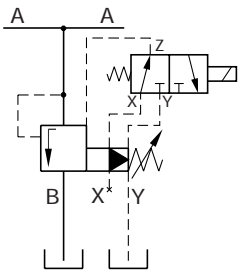
09	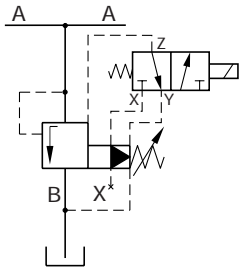	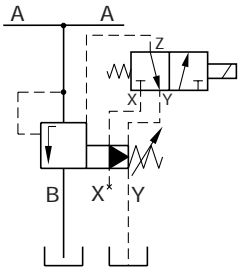

R5P UK.INDD CM 18.07.13

Direct operated check valves series C5V provide free flow in one direction and block the flow in the counter direction.

The SAE flanges allow to mount the C5V directly on the pressure port of pumps for protection against pressure shocks from the system.

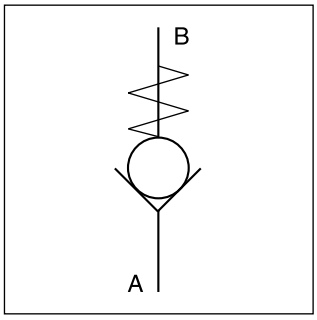

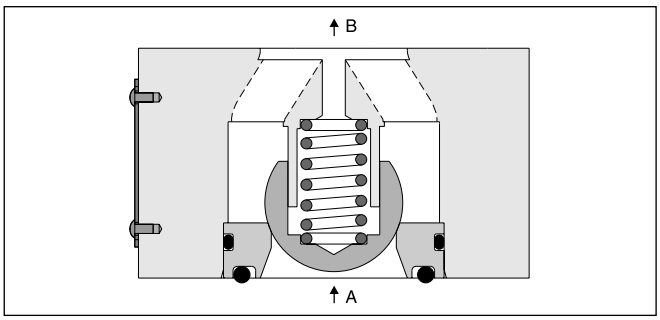

Features

- Direct operated check valve
- SAE61 and SAE62 flange
- 4 sizes (SAE ¾", 1", 1¼", 1½")
- 3 springs
- 5 options for body sealing

Ordering Code

C5V	☐	–	☐	☐	☐	B	☐	☐
Direct operated check valve	Nominal size		Flange	Body sealing	Cracking pressure	Design series	Seals	Options

Code	Port size
06	SAE ¾"
08	SAE 1"
10	SAE 1¼"
12 [1]	SAE 1½"

Code	Flange
3	SAE61
6	SAE62

Code	Body sealing
1	sealing for port A
2 [2]	sealing for port A and X
3	without sealing
4	sealing for port B
5	sealing for port A and B

Code	Options
omit	Standard
019 [3]	M14 mounting screws

Code	Seals
1	NBR
5	FPM

Code	Cracking pressure
0	0.5 bar
1	1.0 bar
2	2.0 bar

[1] SAE61 only
[2] For combination with R5U unloading valve (SAE61 only)
[3] Only for C5V10-6 (SAE62)

General						
Size			06 (¾")	08 (1")	10 (1¼")	12 (1½")
Mounting			2-port inline flange (SAE61 and 62)			
Mounting position			unrestricted			
Ambient temperature		[°C]	-20...+50			
$MTTF_D$ value		[years]	150			
Weight		[kg]	0.6	0.9	1.3	1.8
Hydraulic						
Max. operating pressure	SAE61	[bar]	350	350	280	210
	SAE62	[bar]	420	420	420	420
Nominal flow		[l/min]	100	200	400	750
Fluid			Hydraulic oil according to DIN 51524...51525			
Fluid temperature		[°C]	-20...+80			
Viscosity	permitted	[cSt] / [mm^2/s]	10...650			
	recommended	[cSt] / [mm^2/s]	30			
Filtration			ISO 4406 (1999); 18/16/13			

9

C5V06

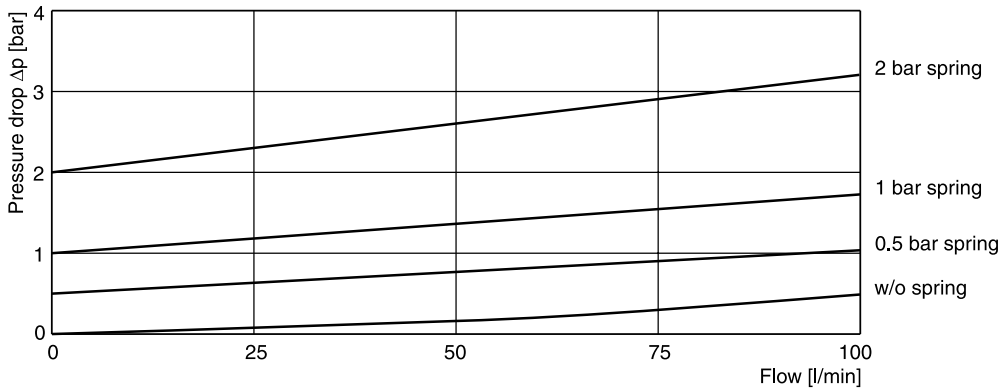

C5V08

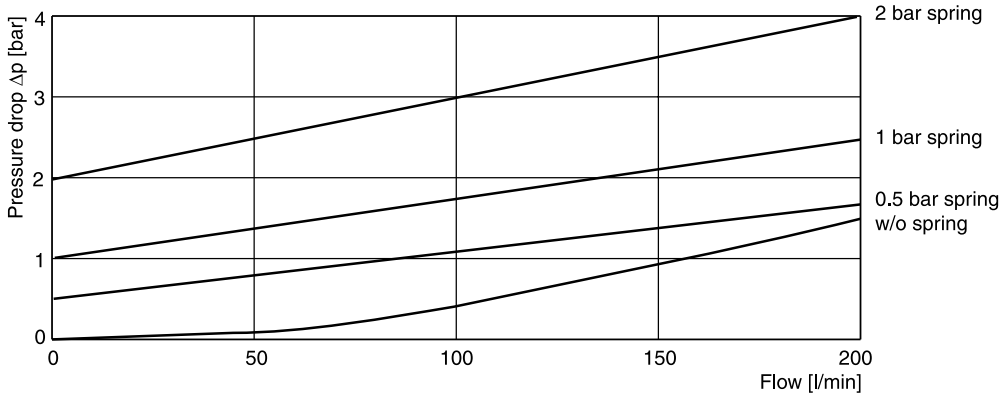

C5V10

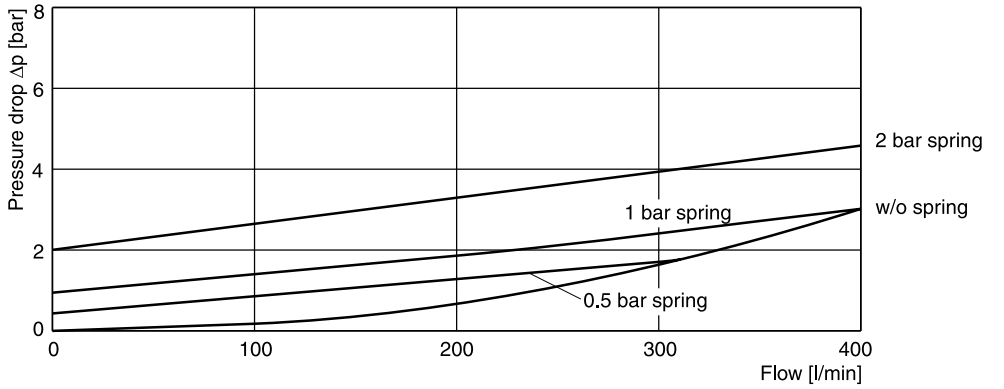

C5V12

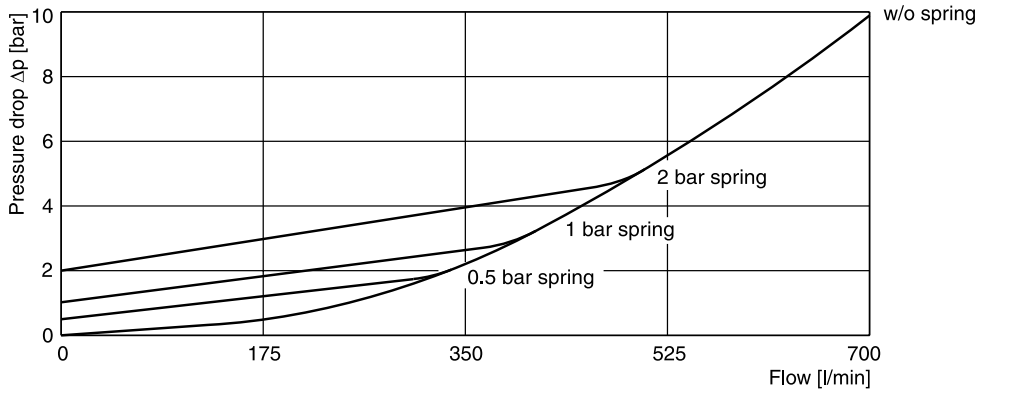

All characteristic curves measured with HLP46 at 50 °C.

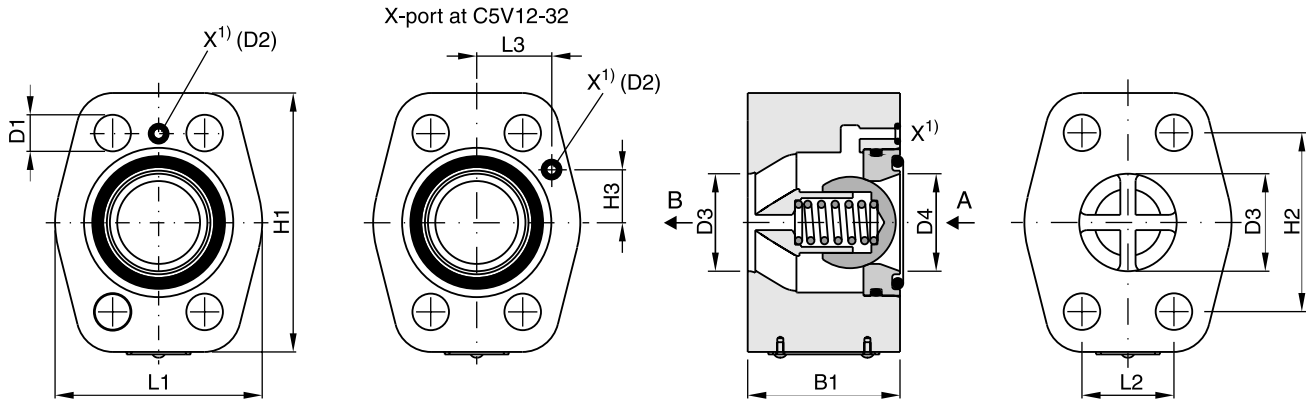

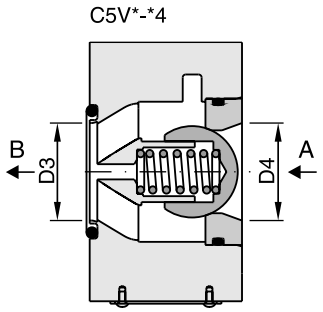

Position of O-ring seal according to ordering code.

Seal kits		
NG	NBR	FPM
06	S26-75409-0	S26-75409-5
08	S26-75410-0	S26-75410-5
10	S26-75411-0	S26-75411-5
12	S26-75412-0	S26-75412-5

Series	Nominal Size		L1	L2	L3	H1	H2	H3	B1	D1	D2	D3 + 0.8	D4
C5V06	3/4"	SAE61	48	22.2	27.2	64	47.6	22.4	45	10.5	Ø3	19	19
		SAE62	48	23.8	27.2	64	50.8	22.4	45	10.5	–	19	19
C5V08	1"	SAE61	60	26.2	27.2	74	52.4	22.4	45	10.5	Ø3	25	25
		SAE62	60	27.8	27.2	74	57.2	22.4	45	12.5	–	25	25
C5V10	1 1/4"	SAE61	68	30.2	27.2	85	58.7	22.4	50	12.5	Ø3	32	32
		SAE62	68	31.8	27.2	85	66.7	22.4	50	13.5 [2]	–	32	32
C5V12	1 1/2"	SAE61	80	35.7	27.2	104	69.8	22.4	50	13.5	Ø3	42	38
		SAE62	80	36.5	27.2	104	79.4	22.4	50	17	–	42	38

[1] X1 port for C5V*32* (for use with unloading valve R5U)
[2] D1 = 15 at option code 019 for M14 mounting screws

Pilot operated check valves series C5P have a similar design to the subplate mounted C4V series. The SAE flanges allow to mount directly on the flanges of actuators to achieve a very compact design.

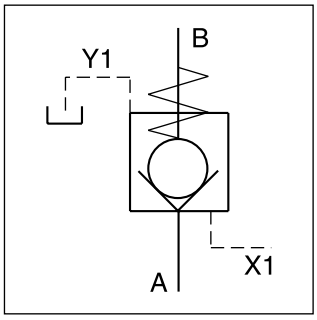

Features

- Pilot operated check valve
- 2-port body with SAE61 flange
- 3 sizes (SAE ¾", 1", 1¼")
- 4 opening ratios
- Optional with position control

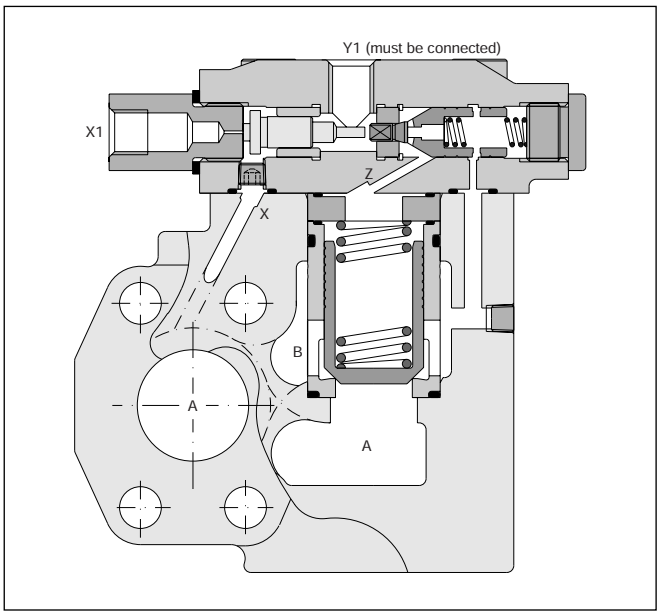

Ordering code

C5P	☐	–	☐	8	☐	☐	A	☐	☐
Pilot operated check valve	Nominal size		SAE61 interface	Pilot ports X1 and Y1=G¼"	Opening ratio	Cracking pressure	Design series	Seals	Options

Code	Nominal size
06	¾"
08	1"
10	1¼"

SAE61		
Code	Max. pressure	Size
4	280 bar	10 (SAE61)
5	350 bar	06/08 (SAE61)

Code	Opening ratio
1	1 : 1
3	3 : 1
8	8 : 1
9	10 : 1

Code	Opening ratio [1]
E	1 : 1
F	3 : 1
G	8 : 1
H	10 : 1

Code	Size	Flow A → B	Flow B → A
2	06	1.0 bar	1.5 bar
	08/10	1.0 bar	1.7 bar
4	06	4.0 bar	5.5 bar
	08/10	3.5 bar	6.0 bar
6	06	2.0 bar	3.0 bar
	08/10	2.2 bar	3.8 bar

Code	Seals
1	NBR
5	FPM

Code	Options
omit	Standard
013	Position control with protection

[1] Position control incl. amplifier for C5P08/10 only.

C5P UK.INDD CM 29.08.13

General					
Size			06 (¾")	08 (1")	10 (1¼")
Mounting			2-port inline flange (SAE61)		
Mounting position			unrestricted		
Ambient temperature		[°C]	-20...+50		
$MTTF_D$ value		[years]	150		
Weight		[kg]	3.9	4.4	5.7
Hydraulic					
Max. operating pressure	Ports A, B	[bar]	350	350	280
	Port Y1	[bar]	30	30	30
Nominal flow		[l/min]	180	360	600
Fluid			Hydraulic oil according to DIN 51524...51525		
Fluid temperature		[°C]	-20...+80		
Viscosity	permitted	[cSt] / [mm^2/s]	10...650		
	recommended	[cSt] / [mm^2/s]	30		
Filtration			ISO 4406 (1999); 18/16/13		

Position Control

Position control by proximity switch with amplifier. The closed position is monitored.

Valve open: proximity switch activated.

This proximity switch is pressure proof and has no wearing parts.

Note: Position control for C5P08 and C5P10 only.

Technical data proximity switch

Function		PNP, contact
Supply voltage (Us)	[VDC]	10...30
Supply voltage ripple	[%]	≤ 10
Current consumption	[mA]	max. 8
Residual voltage L-signal	[V]	Us - 2.2 at Imax
Output current (I)	[mA]	≤ 200
Protection class		IP67
Ambient temperature	[C°]	-25...+70
Wire cross section	[mm2]	3 x 0.5

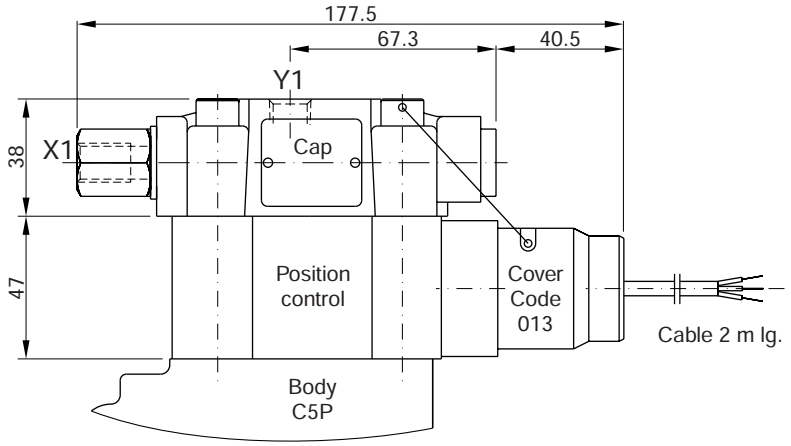

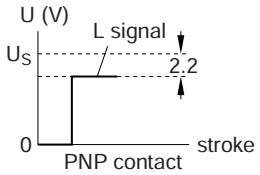

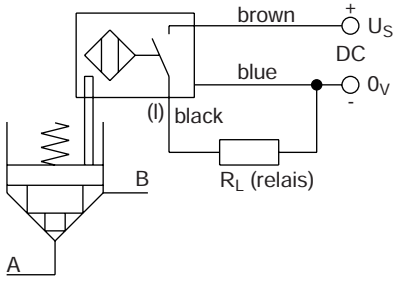

9

p/Q-performance curves

C5P06

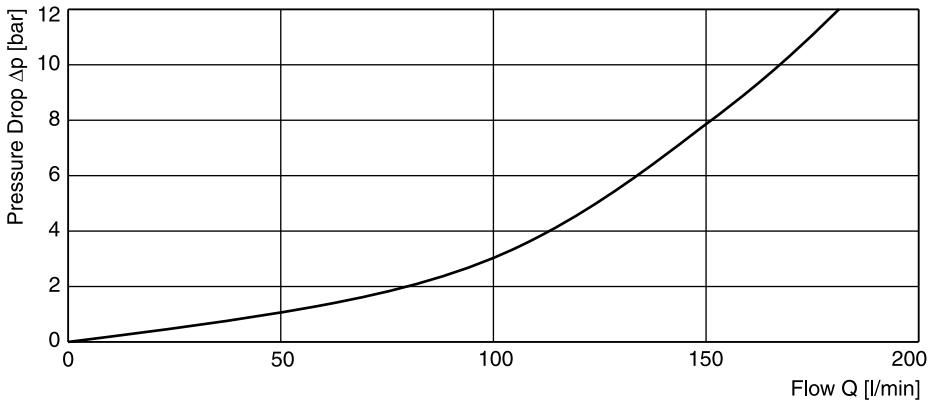

C5P08

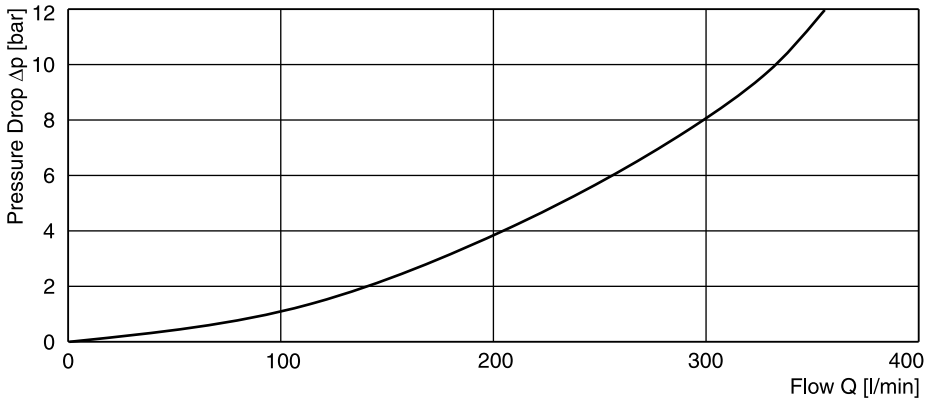

C5P10

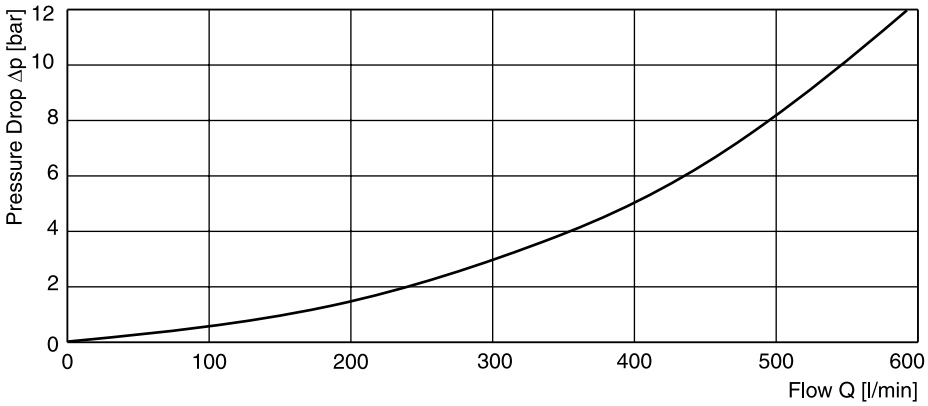

All characteristic curves measured with HLP46 at 50 °C.

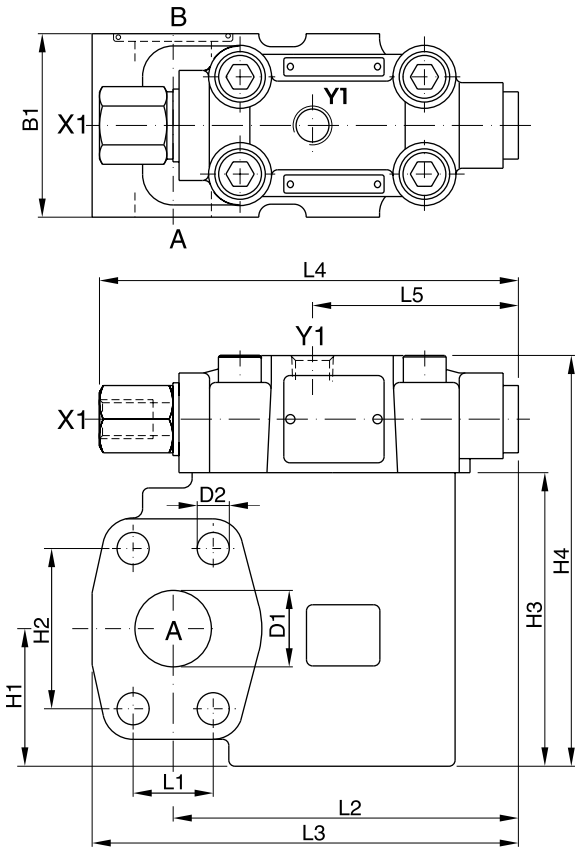

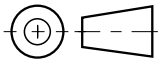

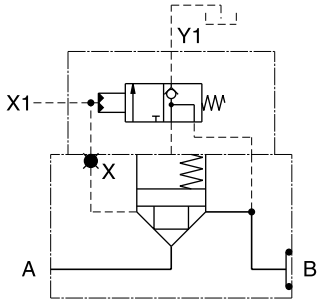

Seal kits		
NG	NBR	FPM
06	S26-59404-0	S26-59404-5
08	S26-59405-0	S26-59405-5
10	S26-59406-0	S26-59406-5

Dimensions

Type	L1	L2	L3	L4	L5	B1	H1	H2	H3	H4	D1	D2
C5P06	22.2	95.8	119.8	137	67.3	60	37	47.6	90	128	19	10.5
C5P08	26.2	112.9	139.4	137	67.3	60	45	52.4	96	134	25	10.5
C5P10	30.2	112.9	146.9	137	67.3	75	48	58.7	109	147	32	12.5

Ports

Port	Function	Port size		
		C5P06	C5P08	C5P10
A	Inlet or outlet	¾" SAE61	1" SAE61	1¼" SAE61
B	Outlet or inlet	¾" SAE61	1" SAE61	1¼" SAE61
X1	External pilot port	G¼"	G¼"	G¼"
Y1	External pilot drain	G¼"	G¼"	G¼"

BK bolt kits for SAE61 valves

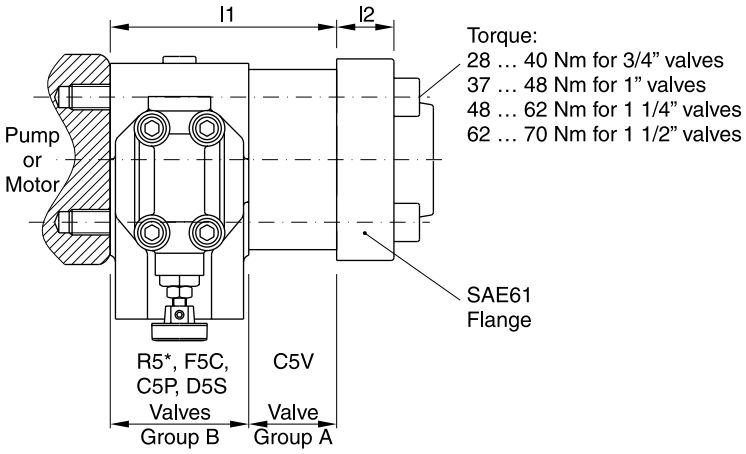

Port	Qty. of valves and group for each stack	l1	l2	UNC screws (12.9)	
				Dimension	Ordering code
¾" SAE61	1 x A	45	16...22	3/8"-16 x 3¼"	BK-358-16330-0
	1 x B	60		3/8"-16 x 3¾"	BK-358-16350-0
	(1 x A) + (1 x B)	105		3/8"-16 x 5½"	BK-358-16420-0
	2 x B	120		3/8"-16 x 6"	BK-358-16440-0
1" SAE61	1 x A	45	18...24	3/8"-16 x 3¼"	BK-358-16330-0
	1 x B	60		3/8"-16 x 3¾"	BK-358-16350-0
	(1 x A) + (1 x B)	105		3/8"-16 x 5¾"	BK-358-16430-0
	2 x B	120		3/8"-16 x 6¼"	BK-358-16450-0
1¼" SAE61	1 x A	50	21...25	7/16"-14 x 3½"	BK-358-18340-0
	1 x B	75		7/16"-14 x 4½"	BK-358-18380-0
	(1 x A) + (1 x B)	125		7/16"-14 x 6½"	BK-358-18460-0
	2 x B	150		7/16"-14 x 7½"	BK-358-18500-0
1½" SAE61	1 x A	50	25...27	1/2"-13 x 3¾"	BK-358-20350-0
	1 x B	80		1/2"-13 x 5"	BK-358-20400-0
	(1 x A) + (1 x B)	130		1/2"-13 x 6¾"	BK-358-20470-0
	2 x B	160		1/2"-13 x 8"	BK-358-20520-0

1 bolt kit contains 4 screws.

BK bolt kits for SAE62 valves

Series	Nominal size	l1	l2	UNC screws (12.9)	
				Dimension	Ordering code
C5V06	¾"	45	21	3/8"-16 x 3¼"	BK-358-16330-0
C5V08	1"	45	25	7/16"-14 x 3½"	BK-358-18340-0
C5V10	1¼"	50	27	1/2"-13 x 3¾"	BK-358-20350-0
R5V06-6	¾"	60	21	3/8"-16 x 3¾"	BK-358-16350-0
R5V08-6	1"	60	25	7/16"-14 x 3¾"	BK-358-18350-0
R5V10-6	1¼"	75	27	1/2"-13 x 4½"	BK-358-20380-0
R5V12-6	1½"	80	30	5/8"-11 x 5¼"	BK-358-24410-0

Inlet flange

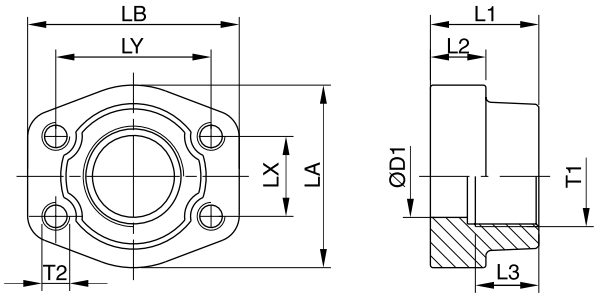

Port size	Order no. [1]	Inlet flange								
		D1	L1	L2	L3	LA	LB	LX	LY	T2
SAE61										
G¾″	PCFF33GSU	19	36	18	19	49	66	22.3	47.6	3/8″ UNC
G1″	PCFF34GSU	25	38	18	19	53	71	26.2	52.4	3/8″ UNC
G1¼″	PCFF35GSU	31	41	21	22	69	80	30.2	58.7	7/16″ UNC
G1½″	PCFF36GSU	38	44	25	24	77	94	35.7	69.9	1/2″ UNC
SAE62										
G¾″	PCFF63GSU	19	36	19	22	53	71	23.8	50.8	3/8″ UNC
G1″	PCFF64GSU	25	44	24	24	69	80	27.8	57.2	7/16″ UNC
G1¼″	PCFF65GSU	31	44	27	25	77	94	31.8	66.6	1/2″ UNC
G1½″	PCFF66GSU	38	51	30	28	89	106	36.5	79.3	5/8″ UNC

Outlet and tank port flange

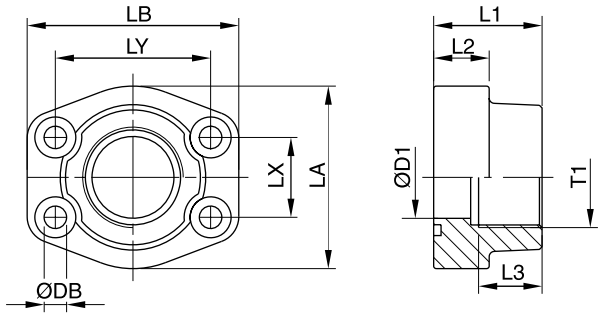

Port size	Order no. [2]	Outlet and tank port flange									Srews
		D1	L1	L2	L3	LA	LB	LX	LY	DB	
SAE61											
G¾″	PFF33GSU	19	36	18	18	49	66	22.3	47.6	10.5	3/8″ x 1 1/2 UNC
G1″	PFF34GSU	25	38	18	20	53	71	26.2	52.4	10.5	3/8″ x 1 1/2 UNC
G1¼″	PFF35GSU	31	41	21	22	69	80	30.2	58.7	11.5	7/16″ x 1 1/2 UNC
G1½″	PFF36GSU	38	44	25	24	77	94	35.7	69.9	13.5	1/2″ x 1 3/4 UNC
SAE62											
G¾″	PFF63GSU	19	36	19	18	53	71	23.8	50.8	10.5	3/8″ x 1 1/2 UNC
G1″	PFF64GSU	25	44	24	20	69	80	27,8	57,2	11.5	7/16″ x 1 1/2 UNC
G1¼″	PFF65GSU	31	44	27	22	77	94	31.8	66.6	15.0	1/2″ x 1 3/4 UNC
G1½″	PFF66GSU	38	51	30	24	89	106	36.5	79.3	17.0	5/8″ x 2 1/4 UNC

[1] 4-bolt flange with UNC threads
[2] 4-bolt flange including UNC screws and O-ring

Description	Threaded cable joint	Body colour coding	Order no.
Plug DIN 43650, design type AF, protection class IP 65 Voltages up to 250 V	PG 9	black, B grey, A	**5001710** **5001711**
	PG11	black, B grey, A	**5001716** **5001717**

Fig. 1

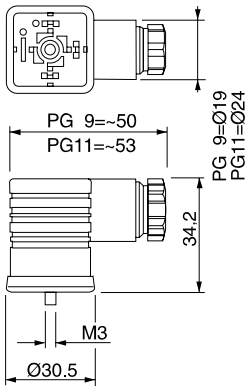

Other plugs on request

9

Series	Description	Size									Body		Page
	DIN / ISO	1/8	1/4	3/8	1/2	3/4	1	1¼	1½	2	L-port	T-port	
	Pressure valves, manual operation												
R4V	Pressure relief function				•	•	•	•			•	•	10-2
R4R	Pressure reducing function				•	•	•	•			•	•	10-8
	Pressure valves, proportional operation												
R4V*P2	Pressure relief function				•	•	•	•			•	•	10-14
R4R*P2	Pressure reducing function				•	•	•	•			•	•	10-19
	Directional seat valves												
D4S	In-line mounted				•	•	•	•			•	•	10-24
	Flow valves												
MV / 9MV	Throttle valve, with handle	•	•	•	•	•	•						10-33
N / 9N	Throttle valve, with knob	•	•	•	•	•	•						10-35
F / 9F	Throttle check valve, with knob	•	•	•	•	•	•	•	•	•			10-37
PCM / 9PCM	Flow control valve, with knob		•	•	•	•	•						10-39
	Check valves												
C / 9C	Direct operated	•	•	•	•	•	•						10-41
CP / 9CP	Pilot operated			•		•							10-43
RH	Pilot operated		•	•	•	•							10-45
	Accessories												
	Plug-in connectors												10-48

10

Pilot operated pressure relief valves for in-line mounting series R4V have a similar design to the subplate mounted R4V series. For single functions – where no manifold blocks are used – the valves can be directly placed in the pipework.

The R4V valves are available with 2 ports (L-body) for in-line relief function or with 3 ports (T-body) for relief functions in the bypass.

R4V10 L-body

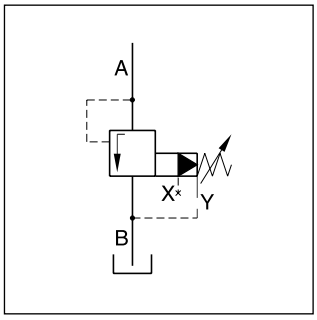

Features

- Pilot operated with manual adjustment
- 2 interfaces:
  - L-body (R4V06-G¾", R4V10-G1¼")
  - T-body (R4V03-G½", R4V06-G1")
- 3 pressure stages
- 3 adjustment modes
  - Hand knob
  - Acorn nut with lead seal
  - Cylinder lock
- With optional vent function

R4V06 L-body

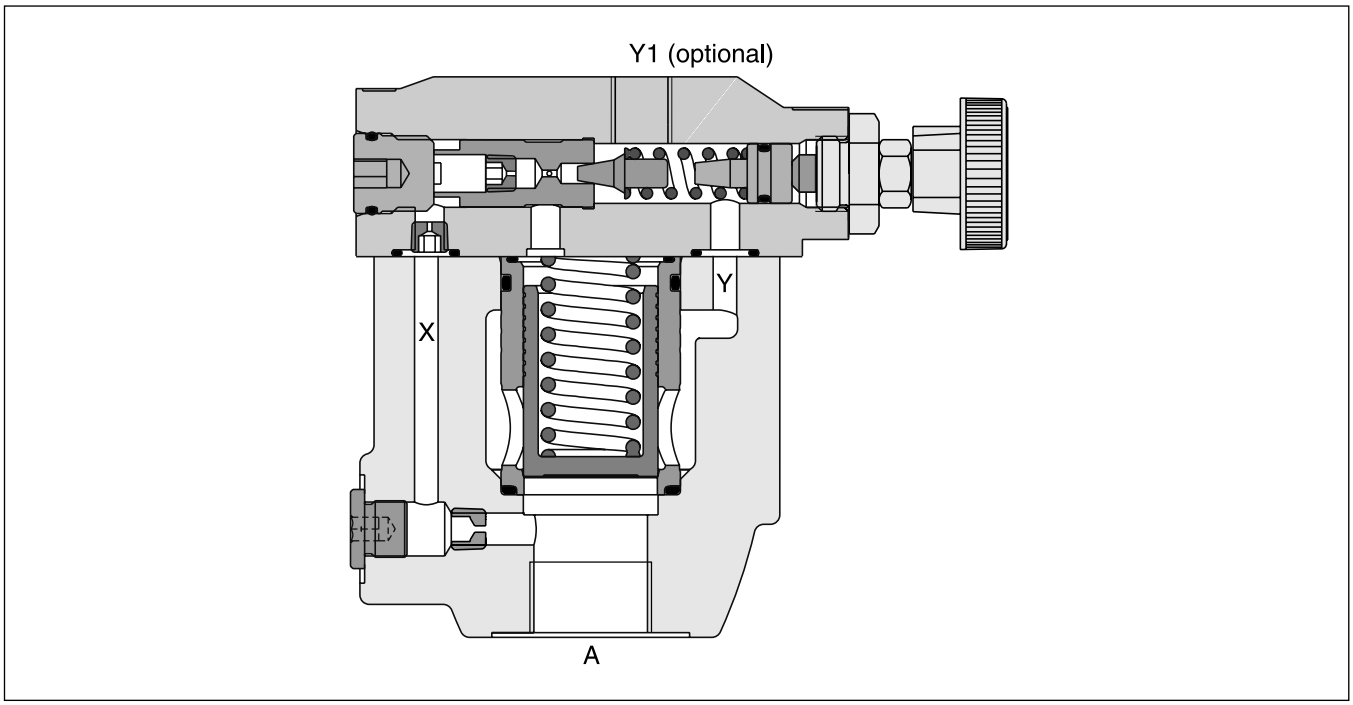

Ordering Code

Series R4V

R4V	☐	–	5	☐	☐	☐	☐	☐	☐	A	☐	☐	☐
Pressure relief valve	**Nominal size**		**Max. pressure 350 bar**	**Body**	**Pressure stages**	**Adjust-ment**	**Drain line**	**Switching type**	**Solenoid voltage**	**Design**	**Seal**	**Design series** (not required for ordering)	**Options**

Code	Nominal size
03	NG10 (G½")
06	NG25 (G1" - T-body, G¾" - L-body)
10	NG32 (G1¼")

Code	Body
6	R4V03 T-body R4V06 T-body
D	R4V06 L-body R4V10 L-body

Code	Pressure stages
1	up to 105 bar
3	up to 210 bar
5	up to 350 bar

Code	Adjustment
1	Hand knob
3	Acorn nut with lead seal
4	Cylinder lock

Code	Seal
1	NBR
5	FPM

Code	Solenoid voltage
omit	Standard w/o vent function
G0R	12 V=
G0Q	24 V=
GAR[1)]	98 V=
GAG[1)]	205 V=
W30	110 V / 50 Hz 120 V / 60 Hz
W31	230 V / 50 Hz 240 V / 60 Hz

Code	Switching type
omit	Standard w/o vent function
09	Solenoid not activated unpressure circulation
11	Solenoid activated unpressure circulation

Code	Drain line
0	internal
2	external from pilot head (Y1)

10

[1)] To be used in combination with rectifier plugs at 120 VAC / 230 VAC power supply.

R4V

General					
Design		**T-body**		**L-body**	
Size		**03 (½")**	**06 (1")**	**06 (¾")**	**10 (1¼")**
Mounting		Threaded body			
Mounting position		unrestricted			
Ambient temperature	[°C]	-20...+50			
$MTTF_D$ value	[years]	75			
Weight	[kg]	3.2	6.6	3.3	5.6
Hydraulic					
Max. operating pressure	[bar]	Ports A and X up to 350; Ports B and Y 30 bar			
Pressure stages	[bar]	105, 210, 350			
Nominal flow	[l/min]	60	200	200	450
Fluid		Hydraulic oil according to DIN 51524...51525			
Fluid temperature	[°C]	-20...+80			
Viscosity permitted	[cSt] / [mm^2/s]	10...650			
Viscosity recommended	[cSt] / [mm^2/s]	30			
Filtration		ISO 4406 (1999); 18/16/13			

R4V with vent function

General					
Design		**T-body**		**L-body**	
Size		**03 (½")**	**06 (1")**	**06 (¾")**	**10 (1¼")**
Mounting		Threaded body			
Mounting position		unrestricted			
Ambient temperature	[°C]	-20...+50			
$MTTF_D$ value	[years]	75			
Weight	[kg]	4.9	8.3	5.0	7.3
Hydraulic					
Max. operating pressure	[bar]	Ports A and X up to 350; Ports B and Y 30			
Pressure stages	[bar]	105, 210, 350			
Nominal flow	[l/min]	60	200	200	450
Fluid		Hydraulic oil according to DIN 51524...51525			
Fluid temperature	[°C]	-20...+80			
Viscosity permitted	[cSt] / [mm^2/s]	10...650			
Viscosity recommended	[cSt] / [mm^2/s]	30			
Filtration		ISO 4406 (1999); 18/16/13			

Electrical (solenoid)							
Duty ratio		100 % ED; CAUTION: coil temperature up to 150 °C possible					
Protection class		IP65 in accordance with EN 60529 (with correctly mounted plug-in connector)					
	Code	G0R	G0Q	GAR	GAG	W30	W31
Supply voltage	[V] [V]	12 V =	24 V =	98 V =	205 V =	110 at 50 Hz 120 at 60 Hz	230 at 50 Hz 240 at 60 Hz
Tolerance supply voltage	[%]	±10	±10	±10	±10	±5	±5
Current consumption hold	[A]	2.72	1.29	0.33	0.13	0.6 / 0.55	0.3 / 0.27
in rush	[A]	2.72	1.29	0.33	0.13	2.5 / 2.4	1.25 / 1.2
Power consumption hold	[W]	32.7	31	31.9	28.2	70/70 VA	70/70 VA
in rush	[W]	32.7	31	31.9	28.2	280/290 VA	280/290 VA
Solenoid connection		Connector as per EN175301-803, solenoid identification as per ISO 9461					
Wiring min.	[mm^2]	3 x 1.5 recommended					
Wiring length max.	[m]	50 recommended					

p/Q performance curve [1)]

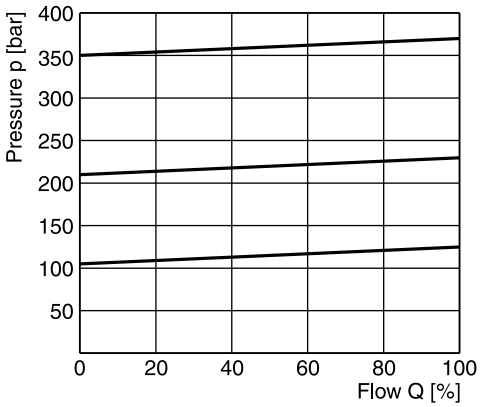

Minimum pressure curve

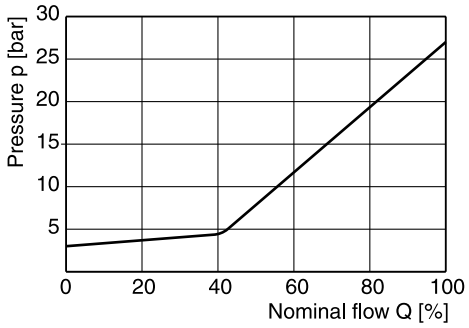

All characteristic curves measured with HLP46 at 50 °C.

Dimensions
T-body

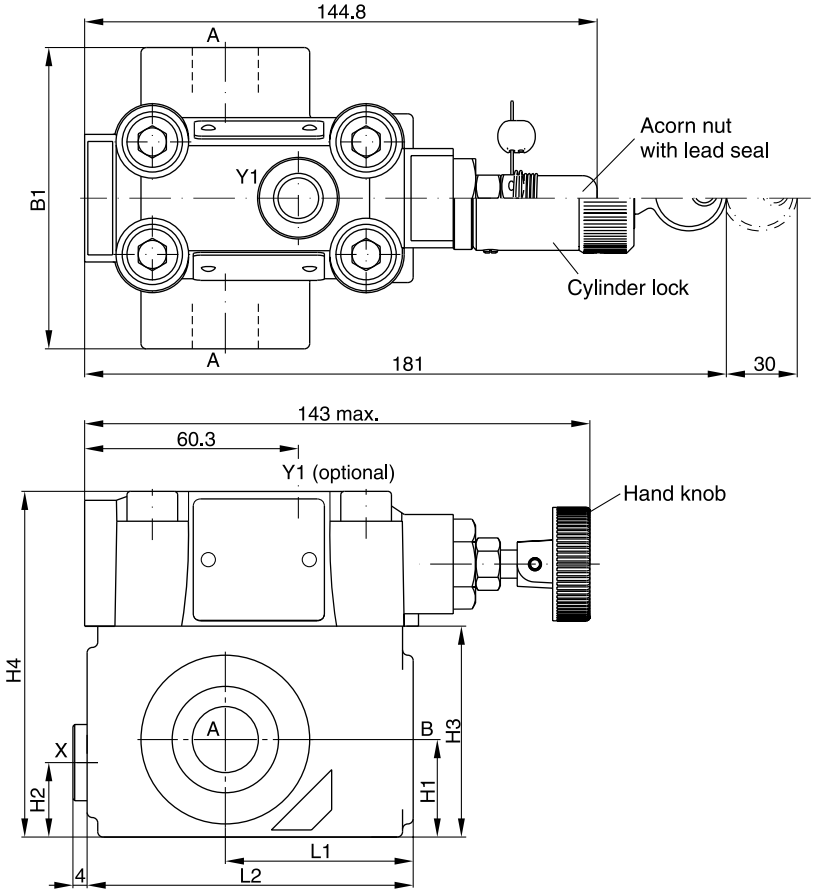

[1)] The performance curves are measured with external drain. For internal drain the tank pressure has to be added to curve.

L-body

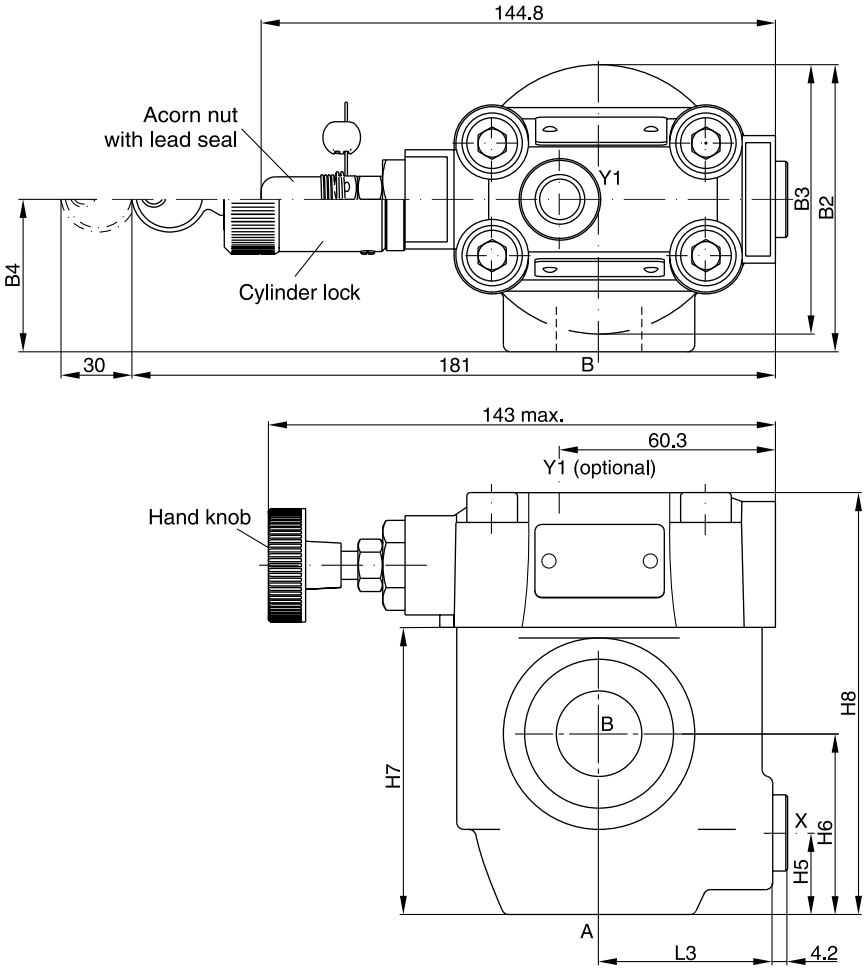

Seal kits		
NG	NBR	FPM
03	S26-58507-0	S26-58507-5
06	S26-58475-0	S26-58475-5
10	S26-58508-0	S26-58508-5

10

NG	Body	B1	B2	B3	B4	H1	H2	H3	H4	H5	H6	H7	H8	L1	L2	L3
03	T-body	85	–	–	–	27.5	21	59.5	97.5	–	–	–	–	53	92	–
06	T-body	136	–	–	–	38	28	93	131	–	–	–	–	66.5	117.5	–
06	L-body	–	81	76	43	–	–	–	–	23	51	81	119	–	–	49
10	L-body	–	120.7	85.8	77.8	–	–	–	–	31.8	50.8	96	134	–	–	49.8

Ports	Function	Port size			
		R4V03 T-body	R4V06 L-body	R4V06 T-body	R4V10 L-body
A	pressure (inlet)	G½ "	G¾ "	G1 "	G1¼ "
B	tank (outlet)	G½ "	G¾ "	G1 "	G1¼ "
X [1]	external remote control or vent connection	G¼ "	G¼ "	G¼ "	G¼ "
Y1 [2]	external drain	G¼ "	G¼ "	G¼ "	G¼ "

[1] Closed when supplied
[2] Port Y1 is only available at drain line (code2) external from the pilot head

R4V with vent function

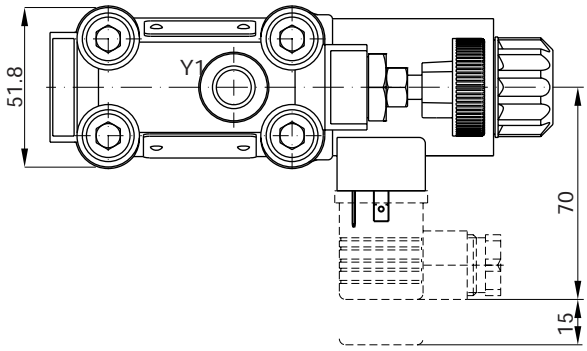

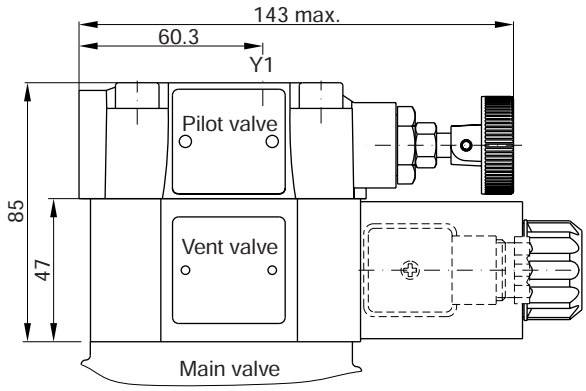

Seal kits	
NBR	**FPM**
DC solenoid	
S56-40609-0	S56-40609-5
AC solenoid	
S26-35237-0	S26-35237-5

Code	Internal drain	External drain
11	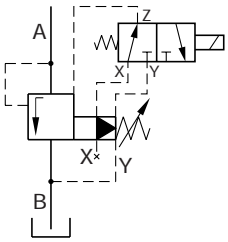	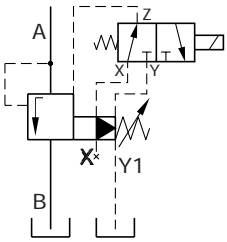
09	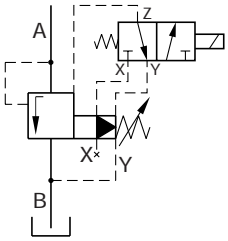	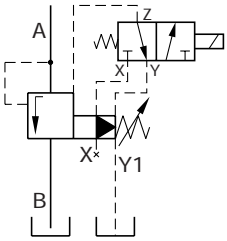

Pilot operated pressure reducing valves for in-line mounting series R4R have a similar design to the subplate mounted R4R series. For single functions – where no manifold blocks are used – the valves can be directly placed in the pipework.

The valves are available with 2 ports (L-body) or with 3 ports (T-body).

R4R10 L-body

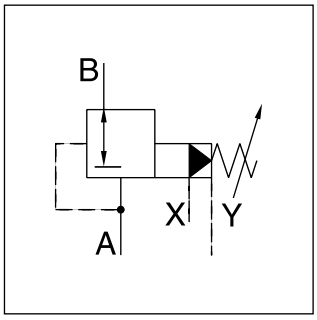

Features

- Pilot operated with manual adjustment
- Normally closed to avoid undesired motion
- 2 interfaces
  - L-body (R4R06-G¾", R4R10-G1¼")
  - T-body (R4R03-G½", R4R06-G1")
- 3 pressure stages
- 3 adjustment modes
  - Hand knob
  - Acorn nut with lead seal
  - Cylinder lock
- With optional vent function

R4R06 L-body

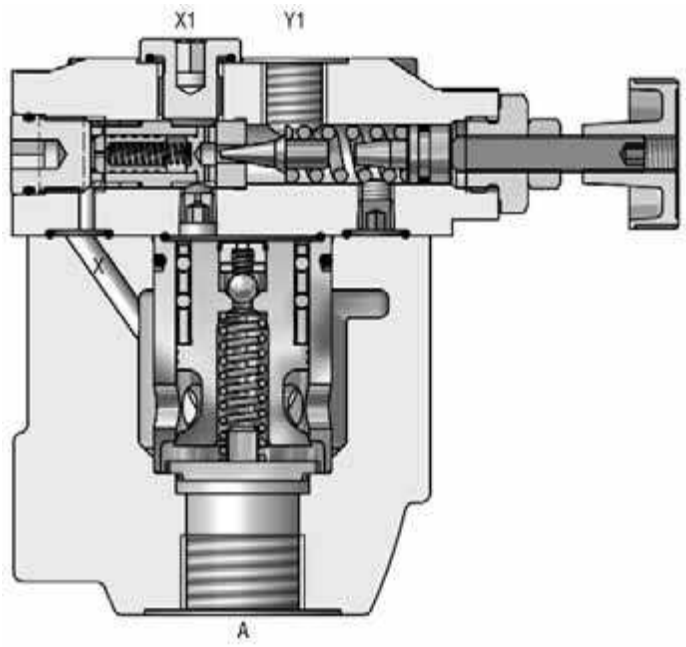

Ordering Code

R4R	[ ]	–	5	[ ]	[ ]	[ ]	2	[ ]	[ ]	B	[ ]	[ ]
Pressure reducing valve	Nominal size		Max. pressure 350 bar	Body	Pressure stages	Adjust-ment	Drain line ext. from pilot head (Y1)	Switching type	Solenoid voltage	Design series	Seal	Options

Code	Nominal size
03	NG10 (G½")
06	NG25 (G1" - T-body, G¾" - L-body)
10	NG32 (G1¼")

Code	Body
6	R4R03 T-body R4R06 T-body
D	R4R06 L-body R4R10 L-body

Code	Pressure stages
1	up to 105 bar
3	up to 210 bar
5	up to 350 bar

Code	Adjustment
1	Hand knob
3	Acorn nut with lead seal
4	Cylinder lock

Code	Seal
1	NBR
5	FPM

Code	Solenoid voltage
omit	Standard w/o vent function
G0R	12 V=
G0Q	24 V=
GAR[1)]	98 V=
GAG[1)]	205 V=
W30	110 V / 50 Hz 120 V / 60 Hz
W31	230 V / 50 Hz 240 V / 60 Hz

Code	Switching type
omit	Standard w/o vent function
09	Solenoid not activated unpressure circulation
11	Solenoid activated unpressure circulation

10

[1)] To be used in combination with rectifier plugs at 120 VAC / 230 VAC power supply.

R4R UK.indd CM 29.08.13

R4R

General					
Design		**T-body**		**L-body**	
Size		**03 (½")**	**06 (1")**	**06 (¾")**	**10 (1¼")**
Mounting		Threaded body			
Mounting position		unrestricted			
Ambient temperature	[°C]	-20...+50			
$MTTF_D$ value	[years]	75			
Weight	[kg]	3.2	3.3	5.6	6.6
Hydraulic					
Max. operating pressure	[bar]	Ports A, B and X: 350; Port Y depressurized			
Pressure stages	[bar]	105, 210, 350			
Nominal flow	[l/min]	60	200	200	450
Fluid		Hydraulic oil as per DIN 51524...51525			
Fluid temperature	[°C]	-20...+80			
Viscosity permitted	[cSt]/[mm^2/s]	10...650			
Viscosity recommended	[cSt]/[mm^2/s]	30			
Filtration		ISO 4406 (1999); 18/16/13			

R4R with vent function

General					
Design		**T-body**		**L-body**	
Size		**03 (½")**	**06 (¾")**	**06 (1")**	**10 (1¼")**
Mounting		Threaded body			
Mounting position		unrestricted			
Ambient temperature	[°C]	-20...+50			
$MTTF_D$ value	[years]	75			
Weight	[kg]	4.9	5.0	7.3	8.3
Hydraulic					
Max. operating pressure	[bar]	Ports A and X up to 350; Ports B and Y depressurized			
Pressure stages	[bar]	105, 210, 350			
Nominal flow	[l/min]	60	200	200	450
Fluid		Hydraulic oil according to DIN 51524...51525			
Fluid temperature	[°C]	-20...+80			
Viscosity permitted	[cSt] / [mm^2/s]	10...650			
Viscosity recommended	[cSt] / [mm^2/s]	30			
Filtration		ISO 4406 (1999); 18/16/13			

10

Electrical (solenoid)							
Duty ratio		100 % ED; CAUTION: coil temperature up to 150 °C possible					
Protection class		IP65 in accordance with EN 60529 (with correctly mounted plug-in connector)					
	Code	G0R	G0Q	GAR	GAG	W30	W31
Supply voltage	[V] [V]	12 V =	24 V =	98 V =	205 V =	110 at 50 Hz 120 at 60 Hz	230 at 50 Hz 240 at 60 Hz
Tolerance supply voltage	[%]	±10	±10	±10	±10	±5	±5
Current consumption hold	[A]	2.72	1.29	0.33	0.13	0.6 / 0.55	0.3 / 0.27
in rush	[A]	2.72	1.29	0.33	0.13	2.5 / 2.4	1.25 / 1.2
Power consumption hold	[W]	32.7	31	31.9	28.2	70 / 70 VA	70 / 70 VA
in rush	[W]	32.7	31	31.9	28.2	280 / 290 VA	280 / 290 VA
Solenoid connection		Connector as per EN175301-803, solenoid identification as per ISO 9461					
Wiring min.	[mm^2]	3 x 1.5 recommended					
Wiring length max.	[m]	50 recommended					

Reduced pressure pA versus flow Q
R4R03 [1)]

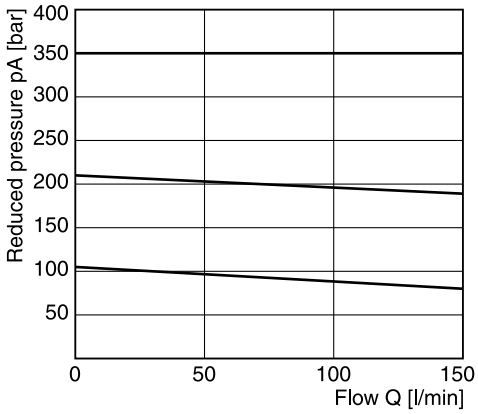

Minimum pressure curve

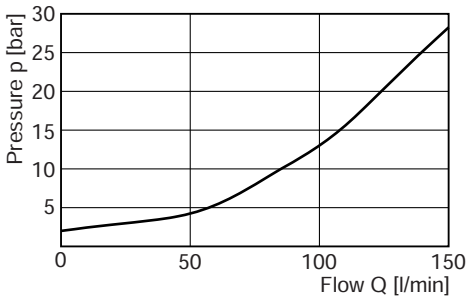

Reduced pressure pA versus flow Q
R4R06 [1)]

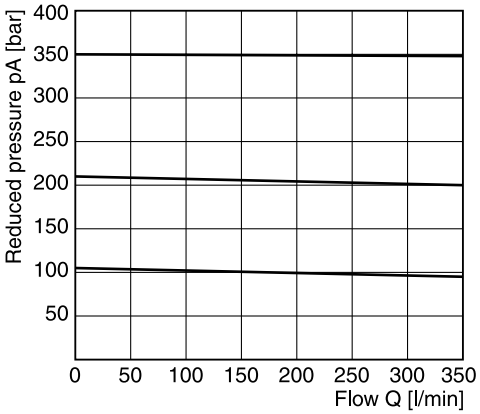

Minimum pressure curve

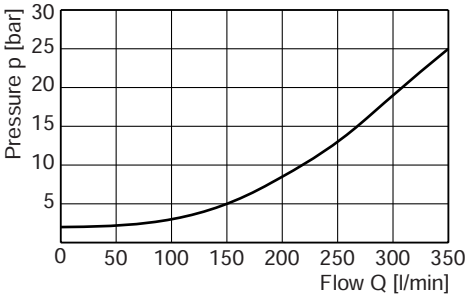

Reduced pressure pA versus flow Q
R4R10 [1)]

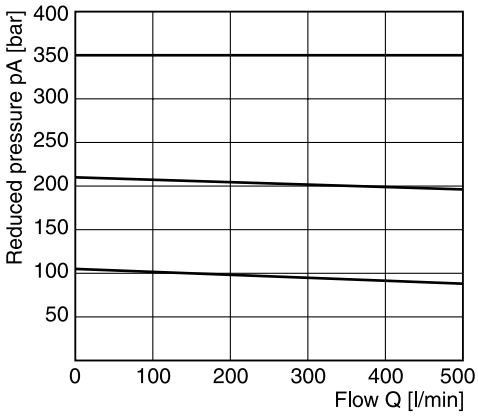

Minimum pressure curve

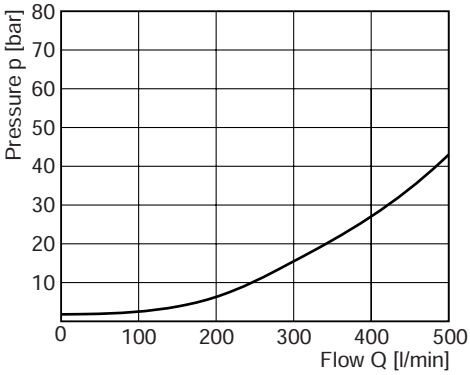

All characteristic curves measured with HLP46 at 50 °C.

[1)] Measured at 350 bar primary pressure pB.

T-body

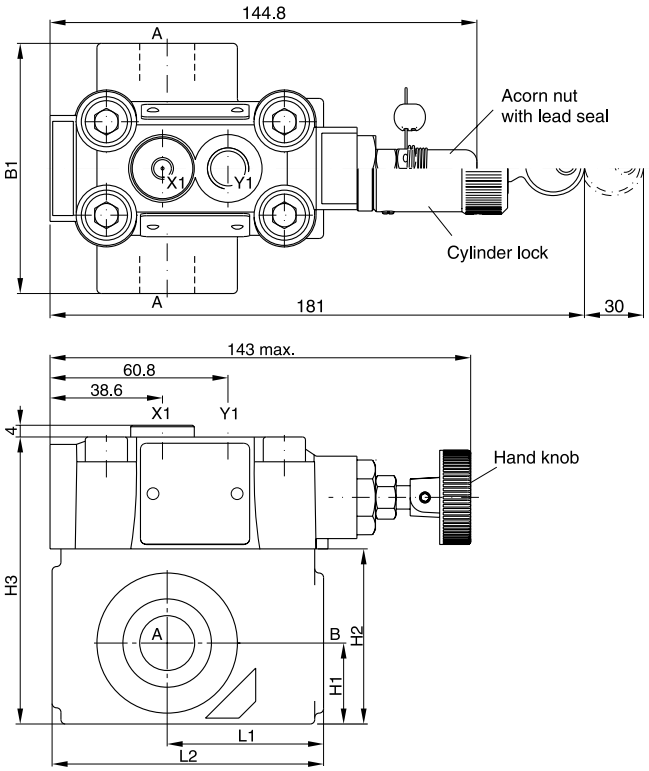

L-body

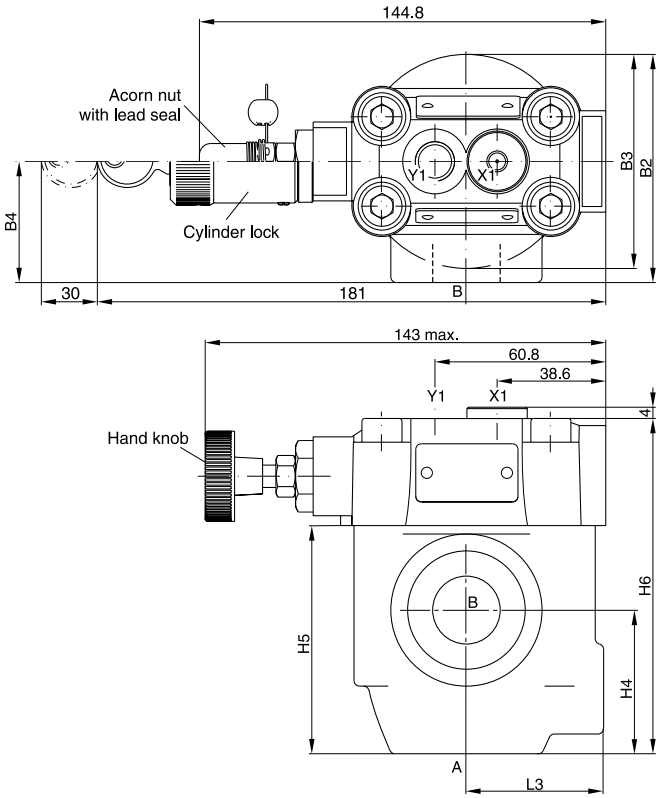

10

Seal kits		
NG	NBR	FPM
03	S26-58507-0	S26-58507-5
06	S26-58475-0	S26-58475-5
10	S26-58508-0	S26-58508-5

NG	Body	B1	B2	B3	B4	H1	H2	H3	H4	H5	H6	L1	L2	L3
03	T-body	85	–	–	–	27.5	59.5	97.5	–	–	–	53	92	–
06	T-body	136	–	–	–	38	93	131	–	–	–	66.5	117.5	–
06	L-body	–	81	76	43	–	–	–	51	81	119	–	–	49
10	L-body	–	120.7	85.8	77.8	–	–	–	50.8	96	134	–	–	49.8

Ports	Function	Port size			
		R4V03 T-body	R4V06 L-body	R4V06 T-body	R4V10 L-body
B	pressure (inlet)	G½ "	G¾ "	G1 "	G1¼ "
A	pressure (outlet)	G½ "	G¾ "	G1 "	G1¼ "
X1	external remote control or vent connection	G¼ "	G¼ "	G¼ "	G¼ "
Y1	external drain	G¼ "	G¼ "	G¼ "	G¼ "

R4R with vent function

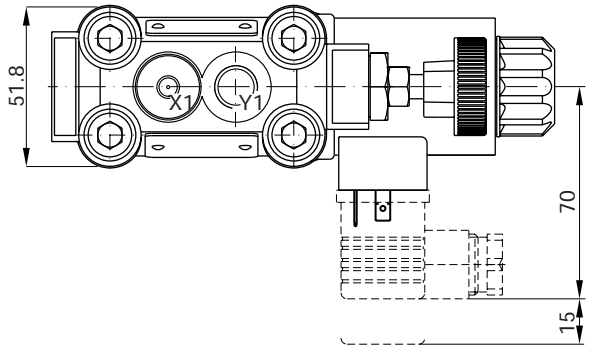

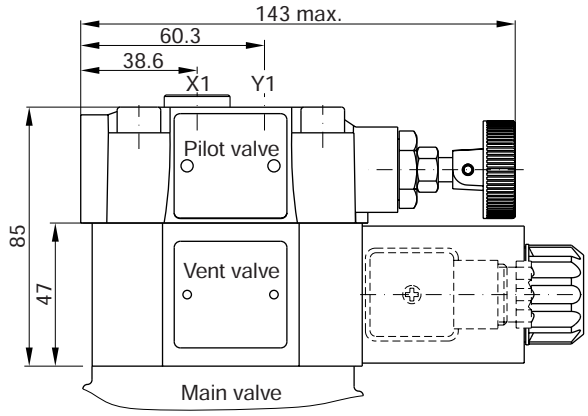

Seal kits	
NBR	FPM
DC solenoid	
S56-40609-0	S56-40609-5
AC solenoid	
S26-35237-0	S26-35237-5

Code	External drain
11	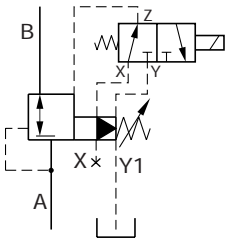
09	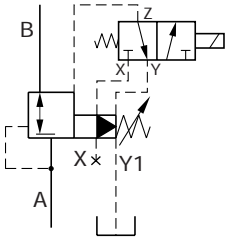

10

R4R UK.indd CM 29.08.13

Proportional pressure relief valves series R4V*P2 are based on the mechanically adjusted series R4V. The additional proportional unit between the mechanical pilot valve and the main stage allows continuous pressure adjustment.

The optimum performance can be achieved in combination with the digital amplifier module PCD00A-400.

R4V10*P2 L-body

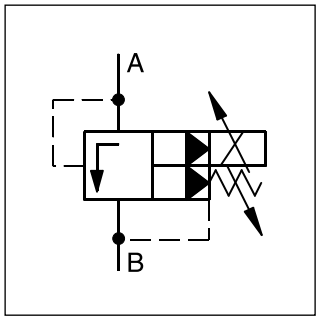

Features

- Continuous adjustment by proportional solenoid
- 2 interfaces
  - L-body (R4V06-G¾", R4V10-G1¼")
  - T-body (R4V03-G½", R4V06-G1")
- 3 pressure stages
- With mechanical maximum pressure adjustment

R4V06*P2 L-body

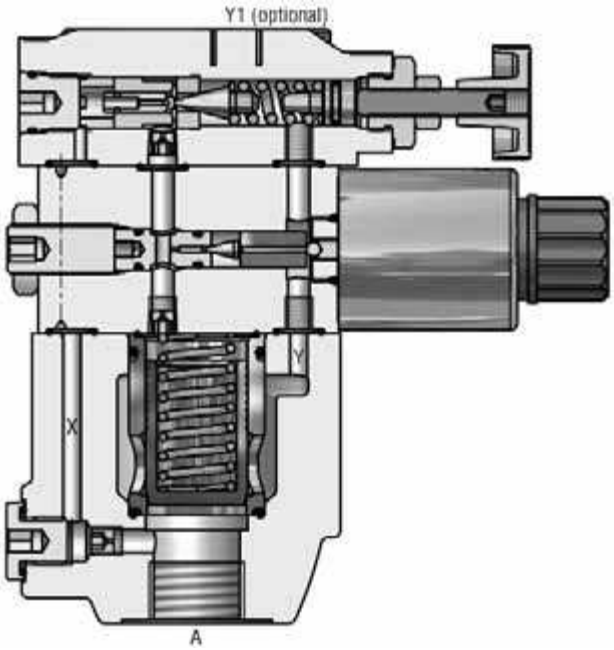

Ordering code

R4V	☐	–	5	☐	☐	☐	☐	P2	G0R	A	☐	☐	☐
Proportional pressure relief valve	Size		Max. pressure 350 bar	Body	Pressure stages	Adjust-ment	Drain line	Proportional pressure control	Solenoid voltage 12 V= [1]	Design	Seal	Design series (not required for ordering)	Options

Code	Nominal size
03	NG10 (G½")
06	NG25 (G1" - T-body, G¾" - L-body)
10	NG32 (G1¼")

Code	Body
6	R4V03 T-body R4V06 T-body
D	R4V06 L-body R4V10 L-body

Code	Pressure stages
1	up to 105 bar
3	up to 210 bar
5	up to 350 bar

Code	Seal
1	NBR
5	FPM

Code	Drain line
0	internal
2	external from pilot head (Y1)

Code	Adjustment
1	Hand knob
3	Acorn nut with lead seal

[1] Onboard electronics on request

Technical data R4V*P2

General					
Design		T-body		L-body	
Size		03 (½")	06 (1")	06 (¾")	10 (1¼")
Mounting		Threaded body			
Mounting position		unrestricted			
Ambient temperature	[°C]	-20...+50			
$MTTF_D$ value	[years]	75			
Weight	[kg]	5.0	5.1	7.4	8.4
Hydraulic					
Max. operating pressure	[bar]	Ports A and X up to 350; Ports B and Y 30 bar			
Pressure stages	[bar]	105, 210, 350			
Nominal flow	[l/min]	60	200	200	450
Fluid		Hydraulic oil according to DIN 51524...51525			
Fluid temperature	[°C]	-20...+80			
Viscosity permitted	[cSt] / [mm^2/s]	20...380			
Viscosity recommended	[cSt] / [mm^2/s]	30			
Filtration		ISO 4406 (1999), 18/16/13			
Electrical (prop. solenoid)					
Duty ratio	[%]	100			
Nominal voltage	[V]	12 =			
Max. current	[A]	2.3			
Coil resistance	[Ohm]	4 at 20 °C			
Solenoid connection		Connector as per EN175301-803			
Protection class		IP65 in accordance with EN 60529 (with correctly mounted plug-in connector)			
Power amplifier		PCD00A-400			

R4VP2 UK.indd CM 29.08.13

Signal/pressure curve R4V

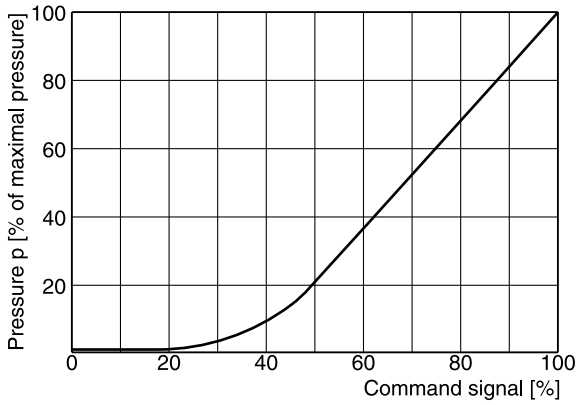

p/Q performance curves [1)]

R4V03

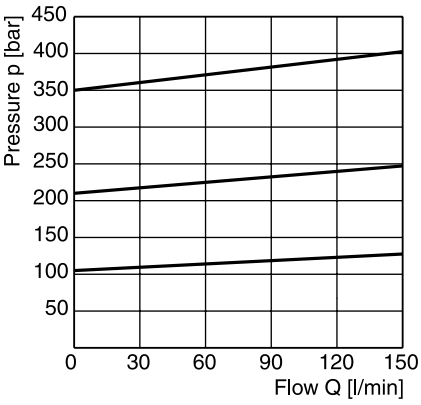

R4V06

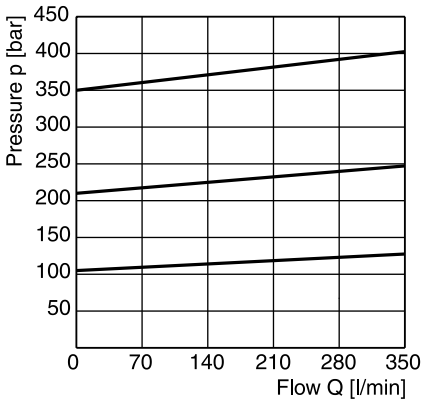

R4V10

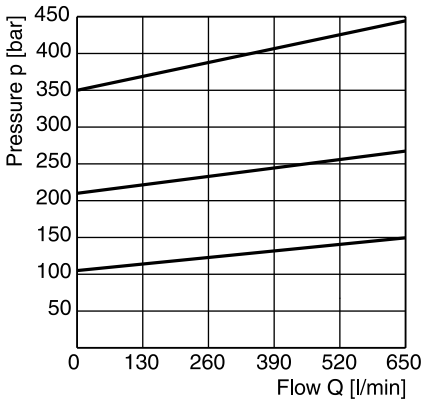

10

Minimum pressure curve [1)]

R4V03

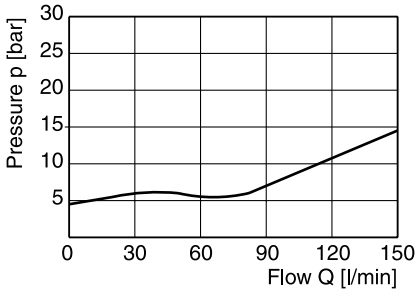

R4V06

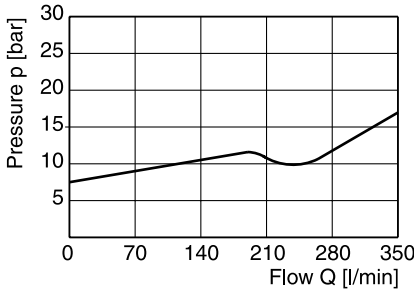

R4V10

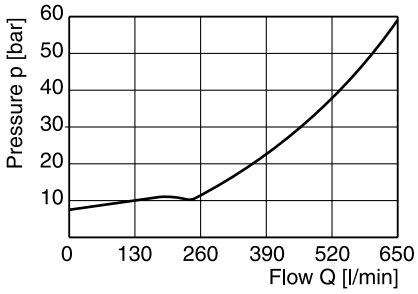

All characteristic curves measured with HLP46 at 50 °C.

[1)] The performance curves are measured with external drain. For internal drain the tank pressure has to be added to curve.

T-body

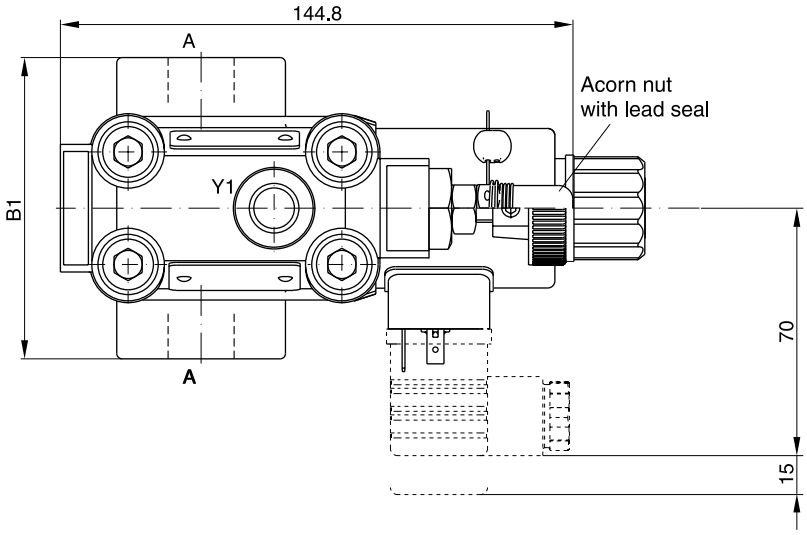

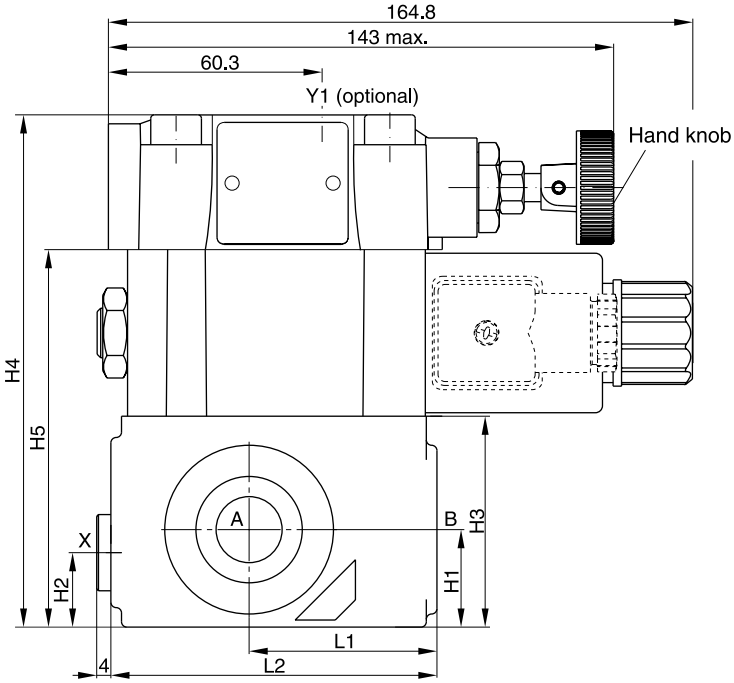

Seal kits		
NG	NBR	FPM
03	S26-58507-0	S26-58507-5
06	S26-58475-0	S26-58475-5
Prop. section P2*	S26-58473-0	S26-58473-5

10

NG	Body	B1	H1	H2	H3	H4	H5	L1	L2
03	T-body	85	27.5	21	59.5	144.5	106.5	53	92
06	T-body	136	38	28	93	178	140	66.5	117.5

Ports	Function	Port size	
		R4V03*P2 T-body	R4V06*P2 T-body
A	pressure (inlet)	G½ "	G1 "
B	tank (outlet)	G½ "	G1 "
X 1)	ext. remote control or vent connection	G¼ "	G¼ "
Y1 2)	external drain	G¼ "	G¼ "

* Please combine seal kit of one size with seal kit of prop. section for complete seal kit
1) Closed when supplied
2) Port Y1 is only available at drain line (code 2) external from the pilot head

R4VP2 UK.indd CM 29.08.13

L-body

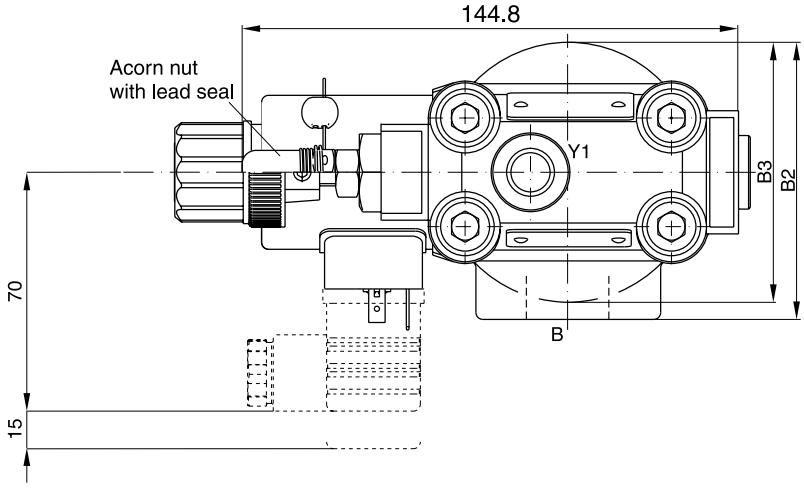

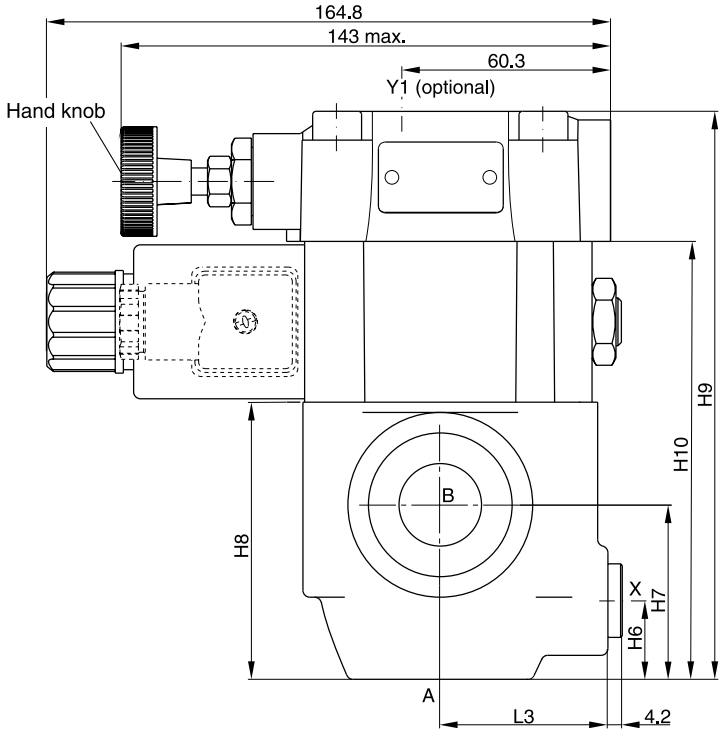

Seal kits		
NG	NBR	FPM
06	S26-58475-0	S26-58475-5
10	S26-58508-0	S26-58508-5
Prop. section P2*	S26-58473-0	S26-58473-5

10

NG	Body	B2	B3	H6	H7	H8	H9	H10	L3
06	L-body	81	76	23	51	81	166	128	49
10	L-body	120.7	85.8	31.8	50.8	96	181	143	49.8

Ports	Function	Port size	
		R4V06 L-body	R4V10 L-body
A	pressure (inlet)	G¾ "	G1¼ "
B	tank (outlet)	G¾ "	G1¼ "
X 1)	ext. remote control or vent connection	G¼ "	G¼ "
Y1 2)	external drain	G¼ "	G¼ "

* Please combine seal kit of one size with seal kit of prop. section for complete seal kit
1) Closed when supplied
2) Port Y1 is only available at drain line (code 2) external from the pilot head

R4VP2 UK.indd CM 29.08.13

Proportional pressure reducing valves series R4R*P2 are based on the mechanically adjusted series R4R. The additional proportional unit between the mechanical pilot valve and the main stage allows continuous pressure adjustment.
The optimum performance can be achieved in combination with the digital amplifier module PCD00A-400.

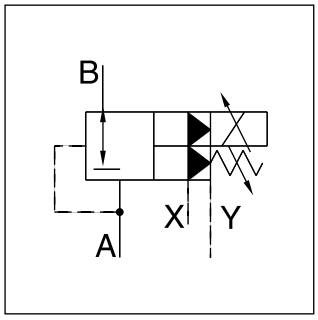

R4R10*P2 L-body

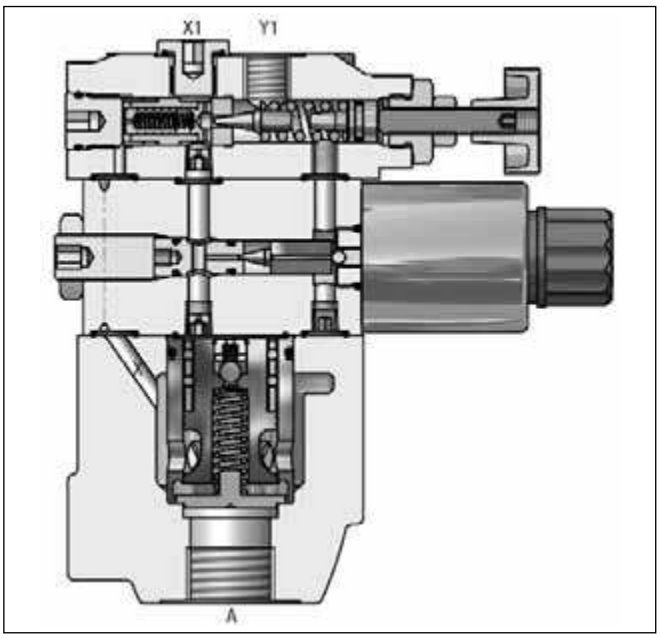

R4R06*P2 L-body

Features

- Normally closed to avoid undesired motion
- Continuous adjustment by proportional solenoid
- 2 interfaces
  - L-body (R4R06-G¾", R4R10-G1¼")
  - T-body (R4R03-G½", R4R06-G1")
- 3 pressure stages
- With mechanical maximum pressure adjustment

Ordering code

R4R	[ ]	–	5	[ ]	[ ]	[ ]	2	P2	G0R	B	[ ]	[ ]
Pressure reducing valve	Nominal size		Max. pressure 350 bar	Body	Pressure stages	Adjust-ment	Drain line ext. from pilot head (Y1)	Proportional pressure control	Solenoid voltage 12 V=	Design series	Seal	Options

Code	Nominal size
03	NG10 (G½")
06	NG25 (G1" - T-body, G¾" - L-body)
10	NG32 (G1¼")

Code	Body
6	R4R03 T-body R4R06 T-body
D	R4R06 L-body R4R10 L-body

Code	Seal
1	NBR
5	FPM

Code	Adjustment
1	Hand knob
3	Acorn nut with lead seal

Code	Pressure stages
1	up to 105 bar
3	up to 210 bar
5	up to 350 bar

Technical data

General					
Design		T-body		L-body	
Size		**03 (½")**	**06 (1")**	**06 (¾")**	**10 (1¼")**
Mounting		Threaded body			
Mounting position		unrestricted			
Ambient temperature	[°C]	-20...+50			
$MTTF_D$ value	[years]	75			
Weight	[kg]	5.0	5.1	7.4	8.4
Hydraulic					
Max. operating pressure	[bar]	Ports A, B and X up to 350; Port Y depressurized			
Pressure stages	[bar]	105, 210, 350			
Nominal flow	[l/min]	60	200	200	450
Fluid		Hydraulic oil as per DIN 51524...51525			
Fluid temperature	[°C]	-20...+80			
Viscosity permitted	[cSt]/[mm²/s]	20...380			
Viscosity recommended	[cSt]/[mm²/s]	30			
Filtration		ISO 4406 (1999) 18/16/13			

Electrical (prop. solenoid)		
Duty ratio	[%]	100
Nominal voltage	[V]	12 =
Max. current	[A]	2.3
Coil resistance	[Ohm]	4 at 20 °C
Solenoid connection		Connector as per EN175301-803
Protection class		IP65 in accordance with EN 60529 (with correctly mounted plug-in connector)
Power amplifier		PCD00A-400

Command/pressure curve

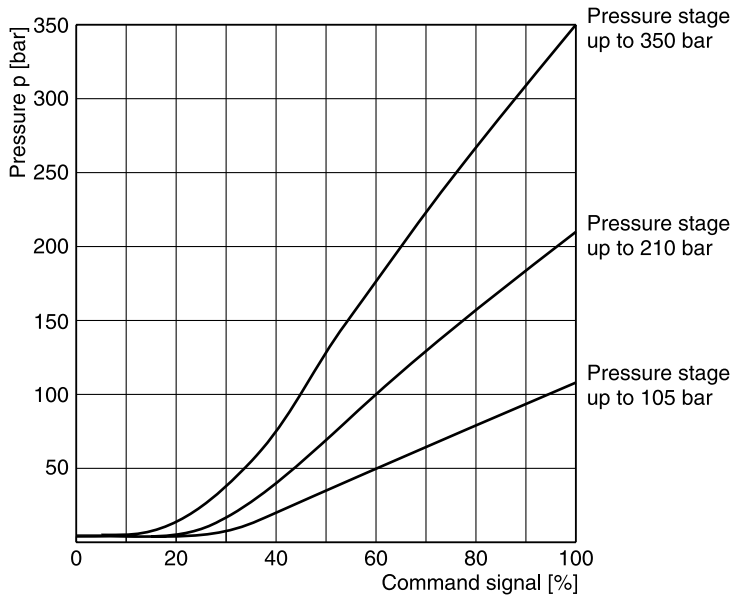

All characteristic curves measured with HLP46 at 50 °C.

Reduced pressure pA versus flow Q
R4R03 [1)]

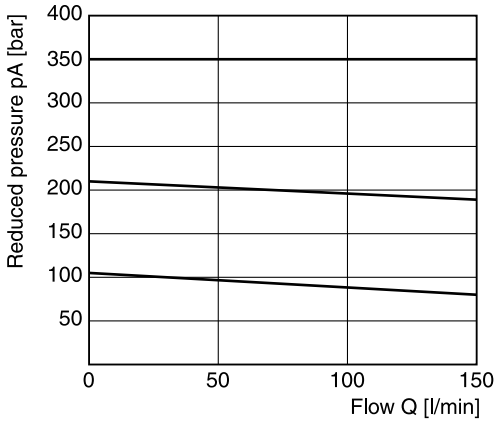

Minimum pressure curve

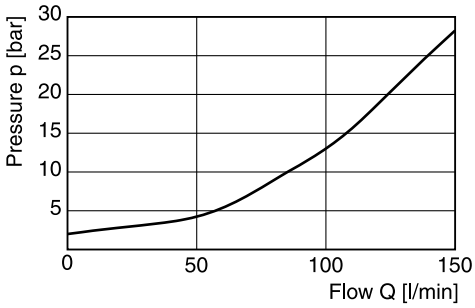

Reduced pressure pA versus flow Q
R4R06 [1)]

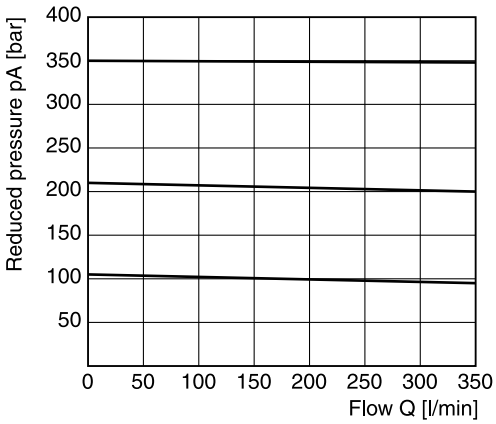

Minimum pressure curve

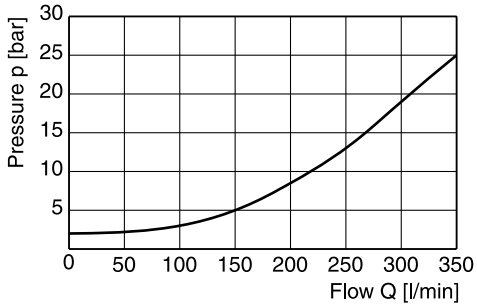

Reduced pressure pA versus flow Q
R4R10 [1)]

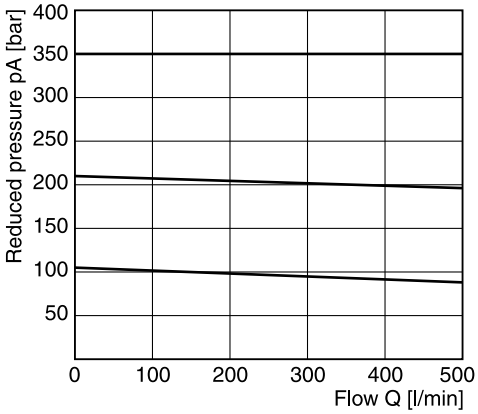

Minimum pressure curve

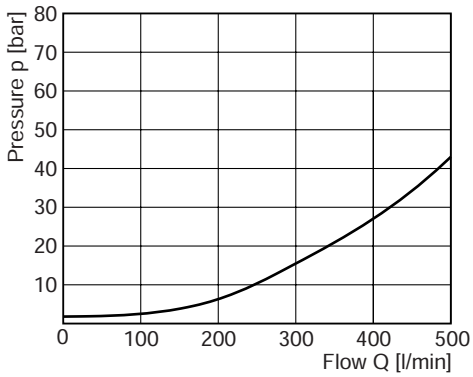

All characteristic curves measured with HLP46 at 50 °C.

[1)] Measured at 350 bar primary pressure pB.

R4RP2 UK.indd CM 29.08.13

T-body

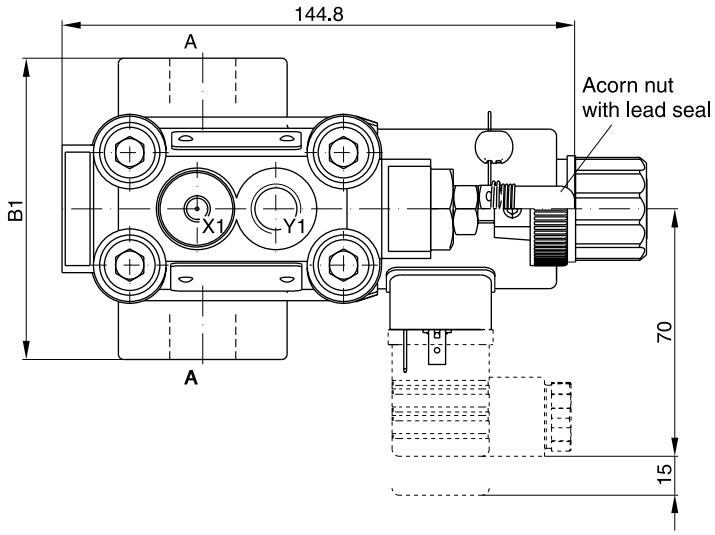

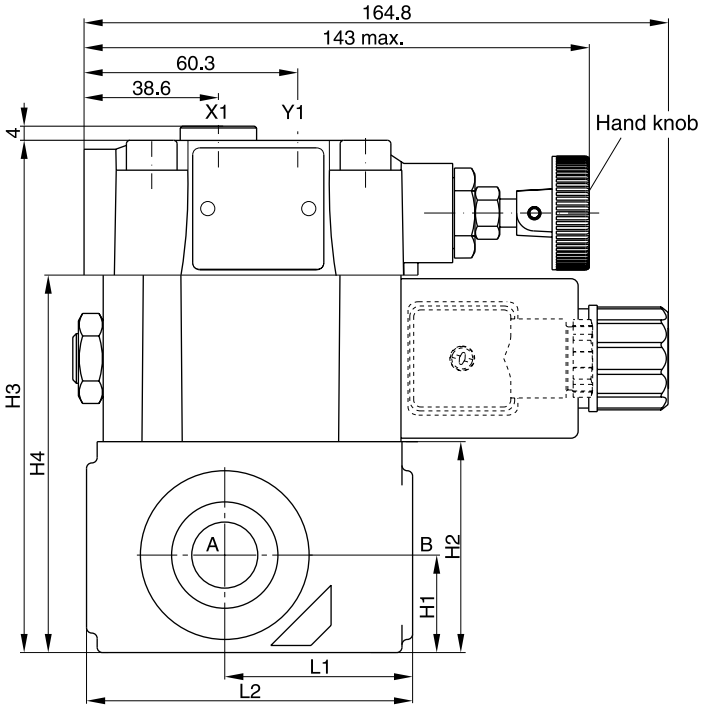

Seal kits		
NG	NBR	FPM
03	S26-58507-0	S26-58507-5
06	S26-58475-0	S26-58475-5
Prop. section P2*	S26-58473-0	S26-58473-5

NG	Body	B1	H1	H2	H3	H4	L1	L2
03	T-body	85	27.5	59.5	144.5	106.5	53	92
06	T-body	136	38	93	178	140	66.5	117.5

Ports	Function	Port size	
		R4V03*P2 T-body	R4V06*P2 T-body
B	pressure (inlet)	G½ "	G1 "
A	pressure (outlet)	G½ "	G1 "
X1 [1)]	ext. remote control or vent connection	G¼ "	G¼ "
Y1	external drain	G¼ "	G¼ "

* Please combine seal kit of one size with seal kit of prop. section for complete seal kit
[1)] Closed when supplied

R4RP2 UK.indd CM 29.08.13

L-body

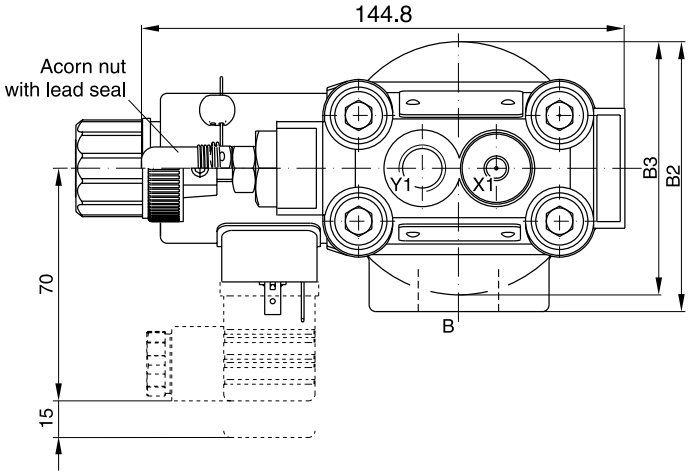

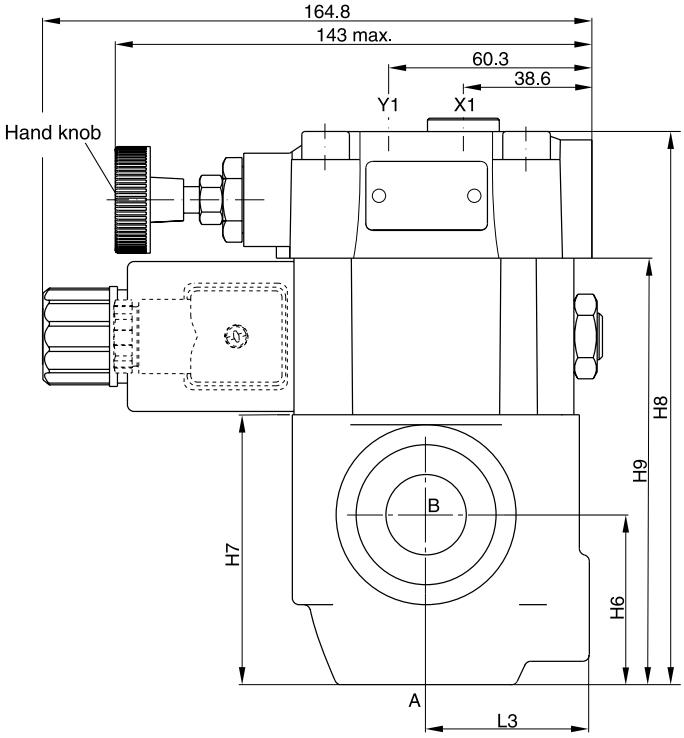

Seal kits		
NG	NBR	FPM
06	S26-58475-0	S26-58475-5
10	S26-58508-0	S26-58508-5
Prop. section P2*	S26-58473-0	S26-58473-5

NG	Body	B2	B3	H6	H7	H8	H9	L3
06	L-body	81	76	51	81	166	128	49
10	L-body	120.7	85.8	50.8	96	181	143	49.8

Ports	Function	Port size	
		R4V06*P2 L-body	R4V10*P2 L-body
B	pressure (inlet)	G¾ "	G1¼ "
A	pressure (outlet)	G¾ "	G1¼ "
X1 [1)]	ext. remote control or vent connection	G¼ "	G¼ "
Y1	external drain	G¼ "	G¼ "

* Please combine seal kit of one size with seal kit of prop. section for complete seal kit
[1)] Closed when supplied

R4RP2 UK.indd CM 29.08.13

Seat valves series D4S are designed for directional control functions. A large variety of poppets, springs and covers – including shuttle valves, stroke limiters, solenoid valves (VV01) and position control – allows to design individual hydraulic solutions for nominal flow up to 600 l/min.

A complete program is offered under the Parker brand:
subplate mounted valves (D4S - chapter 6),
SAE flange valves (D5S - chapter 9),
pipe mounted valves (D4S - chapter 10),
slip-in cartridges (CAR - on request).

D4S10 L-body

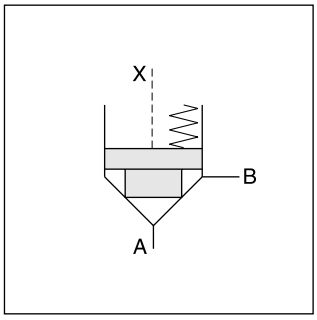

Features

- Leak-free seat valve design
- 2 body designs
  - L-body (2-port)
  - T-body (3-port)
- Numerous pilot options
- 6 poppet types
- 4 port sizes
  - G ½", G 1" for T-body
  - G ¾", G 1 ¼" for L-body

D4S06 L-body

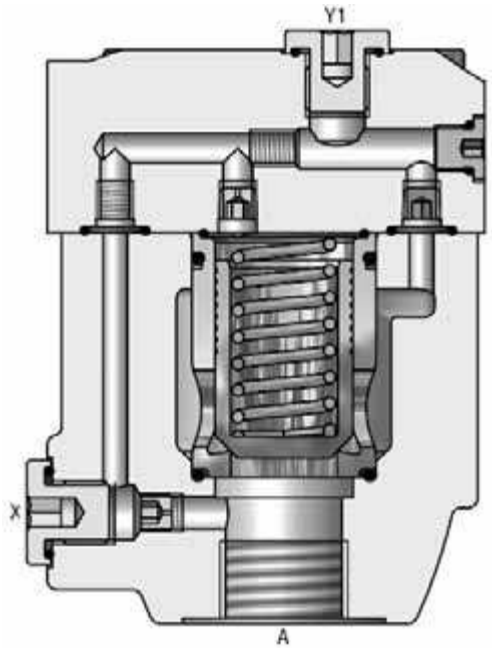

D4S	[ ]	–	[ ]	[ ]	[ ]	[ ]	[ ]	[ ]	[ ]	[ ]	B	[ ]	[ ]
Seat valve	Nominal size		Body	Pilot connection	Cap version	Sleeve	Spool type	Spring	Switching type	Solenoid voltage	Design series	Seals	Options

Code	Port size
03	NG10 (CAR4 build-in)
06	NG25 (CAR2 build-in)
10	NG32 (CAR2 build-in)

Code	Body	Ports
6	D4S03 T-body D4S06 T-body	A, B = G½"; X, Y1 = G¼" A, B = G1"; X, Y1 = G¼"
D	D4S06 L-body D4S10 L-body	A, B = G¾"; X, Y1 = G¼" A, B = G1¼"; X, Y1 = G¼"

Code	Pilot oil line in body		
		A-X	B-Y
1	internal from A	⊖	○
2	internal from X	●	○

Code	Ports	X	Y	Z	X-Y	Y1	VV01
	Standard						
1	Pilot oil = pilot drain	○	●	⊖	○	●	—
C	Pilot oil = pilot drain	●	○	⊖	○	●	—
	With solenoid valve (VV01)						
2	Ext. PD from cap	○	○	⊖	●	○	●
6	Internal pilot drain	○	○	⊖	●	●	○
	With stroke limiter (not for D4S03)						
3	Pilot oil = pilot drain	⊖	●	—	—	—	—
4	Pilot oil = pilot drain	●	⊖	—	—	—	—

○ open bore ● closed bore ⊖ orifice Ø 1.2

Code	Sleeve
1	AA = 95 %, AB = 5 %
3	AA = 60 %, AB = 40 %

Code	Size	Poppet type	Sleeve
1	03, 06,10	With closed bottom and 15° chamfer (pZ max. = pA +20 bar	1
2	03	With 0.8 dia. orifice at the bottom and 15° chamfer	1
	06, 10	With 1.2 dia. orifice at the bottom and 15° chamfer	1
4	03, 06,10	With closed bottom and 45° chamfer	1, 3
A[1]	06, 10	Safety spool (for position control only)	3
B[1]	06, 10	Throttle spool, 10° chamfer	3
C[1]	06, 10	Throttle spool, 3° chamfer	3

Code	Options
omit	Standard
013	Cover for position control

Code	Seals
1	NBR
5	FPM

Code	Solenoid voltage
omit	Standard w/o vent function
G0R	12 V=
G0Q	24 V=
GAR [3]	98 V=
GAG [3]	205 V=
W30	110 V / 50 Hz; 120 V / 60 Hz
W31	230 V / 50 Hz; 240 V / 60 Hz

Code	Switching type	
omit	Standard w/o vent function	
09	VV01 with manual override	de-energized: open
10	VV01 without manual override	
11	VV01 with manual override	de-energized: closed
12	VV01 without manual override	
CA	Shuttle valve	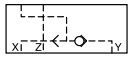
DA	Shuttle valve	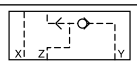
CB	VV01 code 09 and shuttle valve code CA	
CD	VV01 code 11 and shuttle valve code CA	
DB	VV01 code 09 and shuttle valve code DA	
DD	VV01 code 11 and shuttle valve code DA	
BH	VV01 code 10 and shuttle valve code CA and position control [2] with amplifier	
BK	VV01 code 12 and shuttle valve code CA and position control [2] with amplifier	
BN	VV01 code 10 and shuttle valve code DA and position control [2] with amplifier	
BQ	VV01 code 12 and shuttle valve code DA and position control [2] with amplifier	
BC	VV01 code 10 and position control [2] with amplifier	
BE	VV01 code 12 and position control [2] with amplifier	
BA	Position control [2] with amplifier	
BF	Position control [2] with amplifier and shuttle valve code CA	
BL	Position control [2] with amplifier and shuttle valve code DA	

Code	Spring (approx. cracking pressure [bar])					
	Sleeve Code 1		Sleeve Code 3			
	A -> B		A -> B		B -> A	
	D4S03	D4S06/10	D4S03	D4S06/10	D4S03	D4S06/10
1	2.8	3.5	6.5	6.5	9.5	11.0
2	0.5	0.5	1.0	1.0	1.5	1.7
3	0.3	0.3	0.6	0.6	0.9	1.0
4	2.2	2.2	4.0	3.5	5.5	6.0
5	—	9.0	—	16.0	—	28.0
6	1.2	1.2	2.0	2.2	3.0	3.8
7	3.0	—	8.0	—	12.0	—

Examples see end of chapter

[1] Springs 2, 3 and 6 only
[2] Position control for D4S06/10 only. Spring 2 or 4.
Spool A and sleeve 3. Valve open: proximity switch damped
[3] To be used in combination with rectifier plugs at 120 VAC / 230 VAC power supply.

Technical data

General							
Design			T-body		L-body		
Size			**03 (½")**	**06 (1")**	**06 (¾")**	**10 (1¼")**	
Mounting			Threaded body				
Mounting position			unrestricted				
Ambient temperature		[°C]	-20...+50				
MTTF$_D$ value		[years]	150				
Weight	D4S T-body	[kg]	3.2	6.6	—	—	
	D4S L-body	[kg]	—	—	3.3	5.6	
Hydraulic							
Max. operating pressure		[bar]	Ports A, B up to 350; Port Y 140 (with VV01)				
Nominal flow		[l/min]	180	360	360	600	
Fluid			Hydraulic oil as per DIN 51524...51525				
Fluid temperature		[°C]	-20...+80				
Viscosity permitted		[cSt]/[mm²/s]	10...650				
Viscosity recommended		[cSt]/[mm²/s]	30				
Filtration			ISO 4406 (1999); 18/16/13				
Electrical (solenoid)							
Duty ratio			100 % ED; CAUTION: coil temperature up to 150 °C possible				
Protection class			IP65 in accordance with EN 60529 (with correctly mounted plug-in connector)				
		Code	G0R	G0Q	GAR	GAG	W30	W31
Supply voltage		[V] [V]	12 V =	24 V =	98 V =	205 V =	110 at 50 Hz 120 at 60 Hz	230 at 50 Hz 240 at 60 Hz
Tolerance supply voltage		[%]	±10	±10	±10	±10	±5	±5
Current consumption	hold	[A]	2.72	1.29	0.33	0.13	0.6 / 0.55	0.3 / 0.27
	in rush	[A]	2.72	1.29	0.33	0.13	2.5 / 2.4	1.25 / 1.2
Power consumption	hold	[W]	32.7	31	31.9	28.2	70/70 VA	70/70 VA
	in rush	[W]	32.7	31	31.9	28.2	280/290 VA	280/290 VA
Solenoid connection			Connector as per EN175301-803, solenoid identification as per ISO 9461					
Wiring min.		[mm²]	3 x 1.5 recommended					
Wiring length max.		[m]	50 recommended					

D4S pilot configuration

L-body (2-port)	T-body (3-port)
Standard	
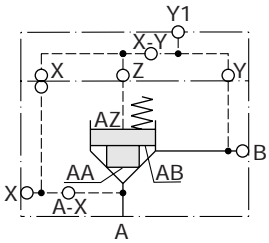	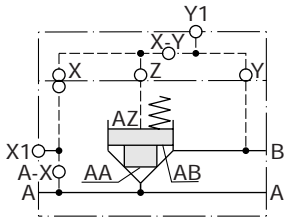
with vent valve VV01	
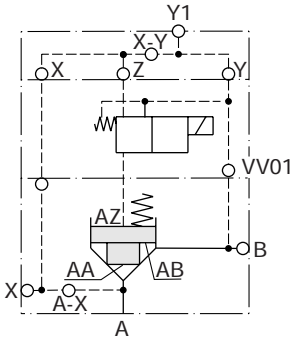	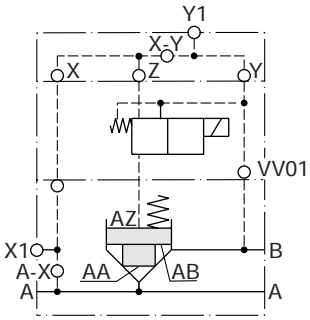

10

D4S UK.indd CM 29.08.13

Δp/Q performance curves

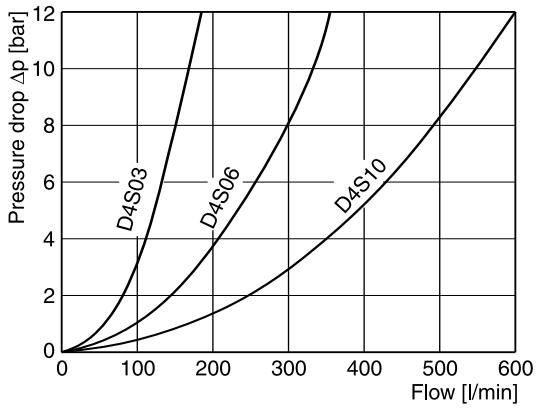

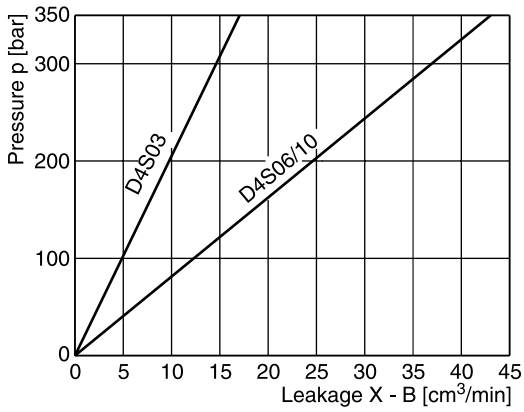

All characteristic curves measured with HLP46 at 50 °C.

Selection of Cartridges

Sleeve 1, poppet 1	Sleeve 1, poppet 2	Sleeve 1, poppet 4	Sleeve 3, poppet 4	Sleeve 3, poppet A	Sleeve 3, poppet B/C
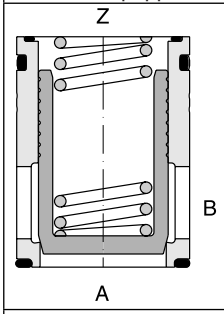	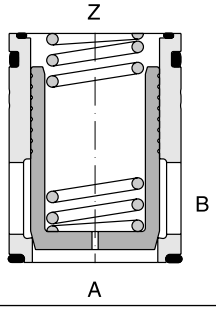	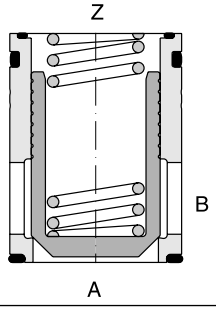	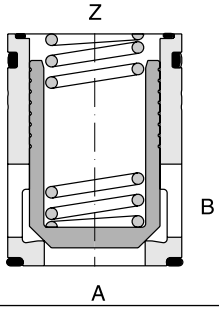	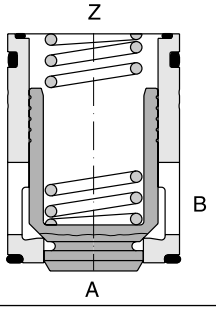	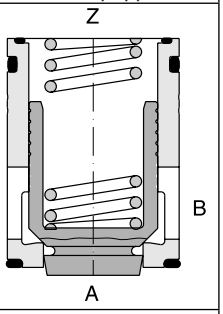
1 : 1.05 $A_A = 0.95\ A_C$ $A_B = 0.05\ A_C$ 15° chamfer	1 : 1.05 $A_A = 0.95\ A_C$ $A_B = 0.05\ A_C$ 15° chamfer orifice	1 : 1.05 $A_A = 0.95\ A_C$ $A_B = 0.05\ A_C$ 45° chamfer	1 : 1.67 $A_A = 0.6\ A_C$ $A_B = 0.4\ A_C$ 45° chamfer	1 : 1.67 $A_A = 0.6\ A_C$ $A_B = 0.4\ A_C$ 45° chamfer safety spool	1 : 1.67 $A_A = 0.6\ A_C$ $A_B = 0.4\ A_C$ 45° chamfer throttle spool

D4S 03/06 T-body

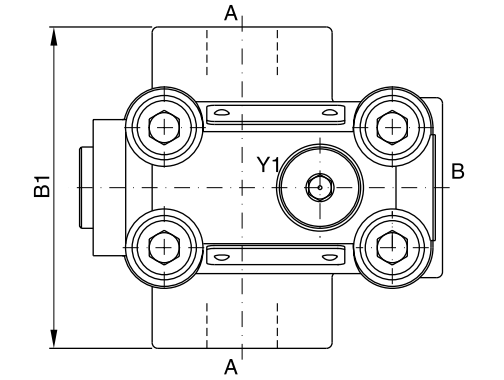

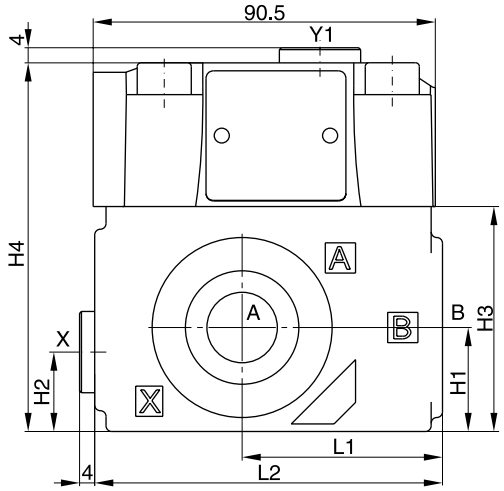

D4S 06/10 L-body

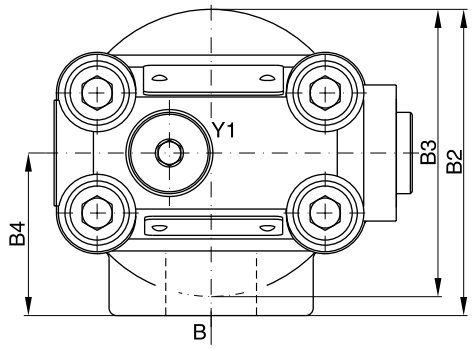

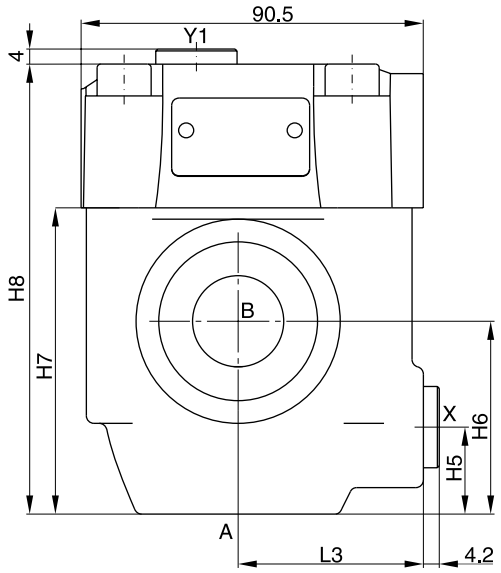

Seal kits		
NG	NBR	FPM
03	S26-58507-0	S26-58507-5
06	S26-58475-0	S26-58475-5
10	S26-58508-0	S26-58508-5

10

Size	L1	L2	B1	H1	H2	H3	H4
03 (T-body)	53	92	85	27.5	21	59.5	97.5
06 (T-body)	66.5	117.5	136	38	28	93	131

Size	L3	B2	B3	B4	H5	H6	H7	H8
06 (L-body)	49	81	76	43	23	51	81	119
10 (L-body)	49.8	120.7	85.6	77.8	38.1	50.8	96	134

Ports	Function	Port size			
		D4S03 T-body	D4S06 L-body	D4S06 T-body	D4S10 L-body
A	inlet or outlet	G½"	G¾"	G1"	G1¼"
B	outlet or inlet	G½"	G¾"	G1"	G1¼"
X1	external pilot port	G¼"			
Y1	external drain [1]	G¼"			

[1] With VV01 only

D4S UK.indd CM 29.08.13

D4S with VV01

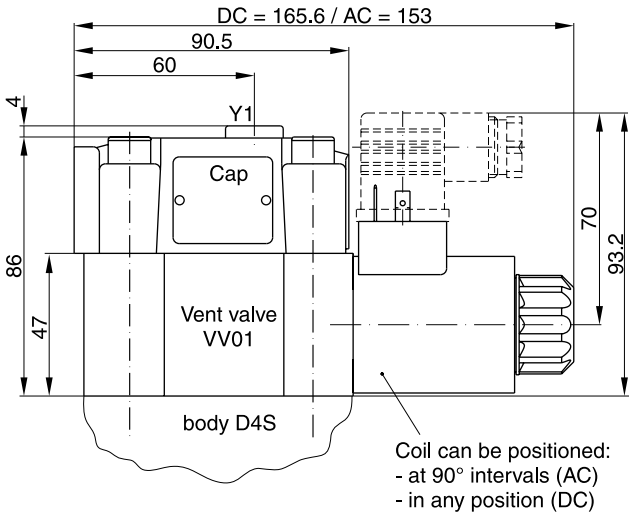

Seal kits	
NBR	**FPM**
DC solenoid	
S56-40609-0	S56-40609-5
AC solenoid	
S26-35237-0	S26-35237-5

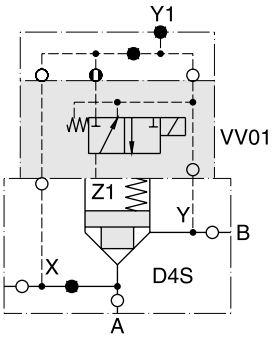

with manual override — without manual override

D4S..-.....09/10
Solenoid energized:
D4S blocked
Solenoid deenergized:
Flow from A-B or B-A

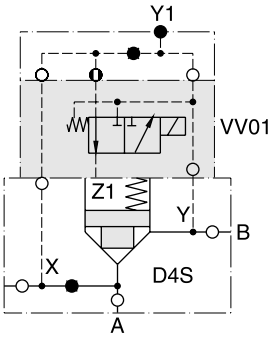

with manual override — without manual override

D4S..-.....11/12
Solenoid energized:
Flow from A-B or B-A
Solenoid deenergized:
D4S blocked

10

D4S position control

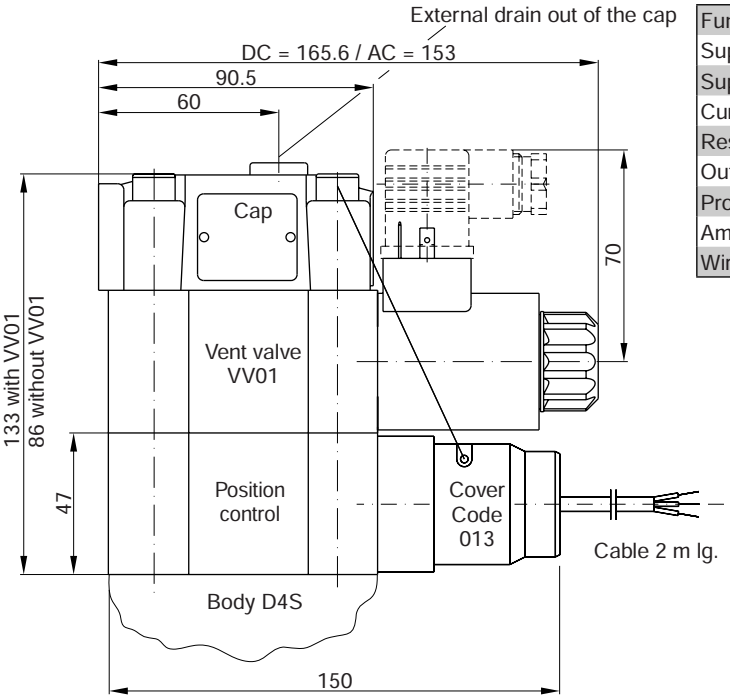

Function		PNP, contact
Supply voltage (Us)	[VDC]	10...30
Supply voltage ripple	[%]	≤ 10
Current consumption	[mA]	max. 8
Residual voltage L-signal	[V]	Us - 2.2 at I_{max}
Output current (I)	[mA]	≤ 200
Protection class		IP67
Ambient temperature	[C°]	-25...+70
Wire cross section	[mm²]	3 x 0.5

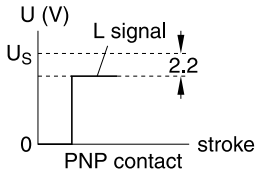

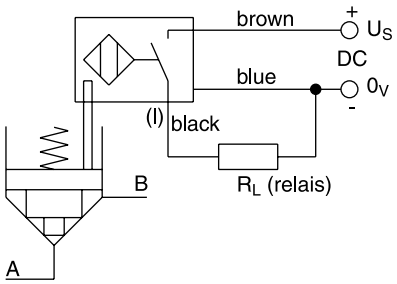

Position control by proximity switch (incl. amplifier)

Valve open: proximity switch activated.

This proximity switch is pressure proof and has no wearing parts.

Note

Position control for D4S06 and D4S10 only.

D4S stroke limiter

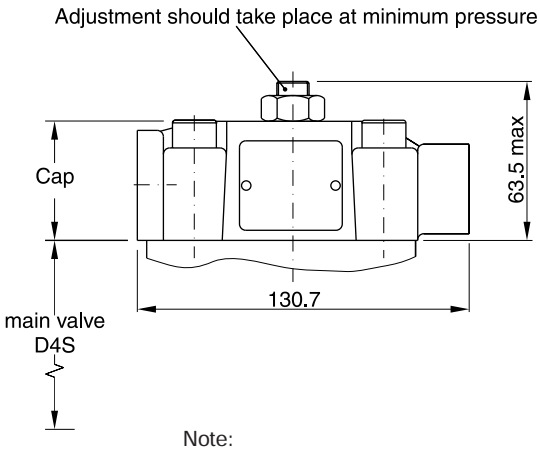

Example: D4S$^{06}_{10}$-.233B.

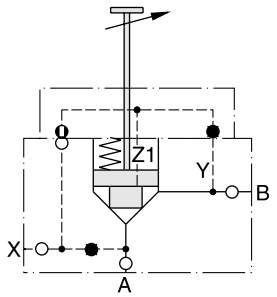

Note:
Stroke limiter not for use with D4S03, VV01, shuttle valve and positon control.

D4S direct operated

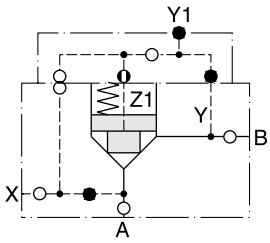

D4S..-.21
Pilot oil X = external

D4S with solenoid valve VV01

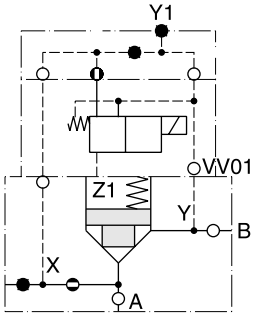

D4S..-.16... 09 10 11 12 with VV01
Pilot oil X = internal from A
Drain Y = internal to B

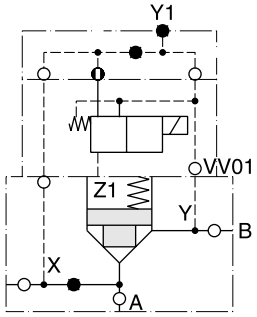

D4S..-.26... 09 10 11 12 with VV01
Pilot oil X = external
Drain Y = internal to B

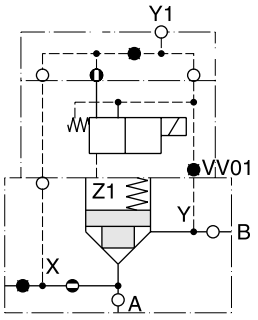

D4S..-.12... 09 10 11 12 with VV01
Pilot oil X = internal from A
Drain Y1 = external out of cap

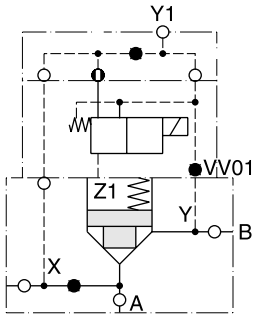

D4S..-.22... 09 10 11 12 with VV01
Pilot oil X = external
Drain Y1 = external out of cap

10

D4S with position control

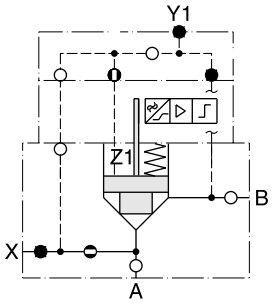

D4S..-.113A.BA
(with position control)

Pilot oil X = intern from A

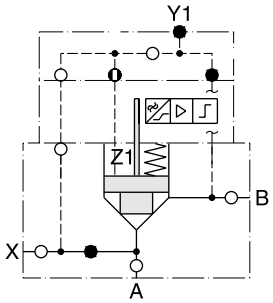

D4S..-.213A.BA
(with position control)

Pilot oil X = external

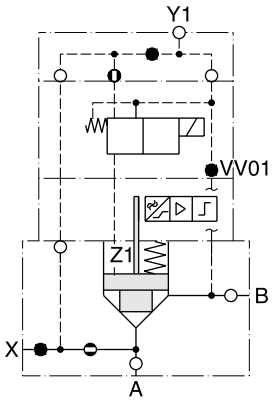

D4S..-.123A. BC / BE } with position control and VV01

Pilot oil X = intern from A
Drain Y1 = external out of cap

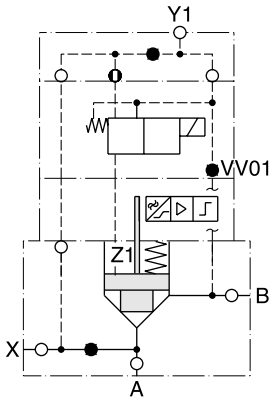

D4S..-.223A. BC / BE } with position control and VV01

Pilot oil X = external
Drain Y1 = external out of cap

10

D4S with stroke limiter

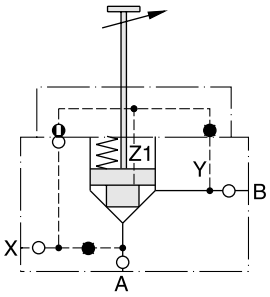

D4S..-.233B. with stroke limiter
Pilot oil X = external
(Note: for D4S06 and D4S10 only)

Manatrol needle valve, optional with 30° poppet, V-notch, or rectangular slot. The form of the throttle opening influences the accuracy of the flow setting, which depends on pressure and viscosity. The needle is made of stainless steel and corresponds to a ring gap in the valve body.

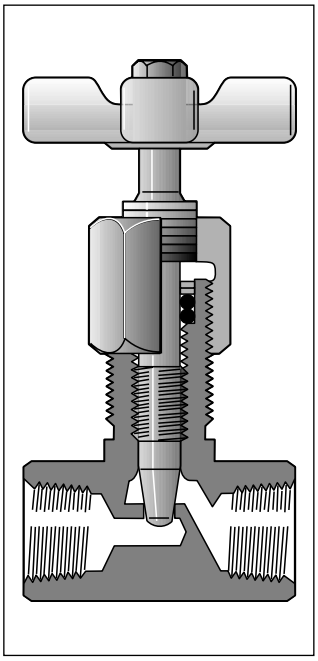

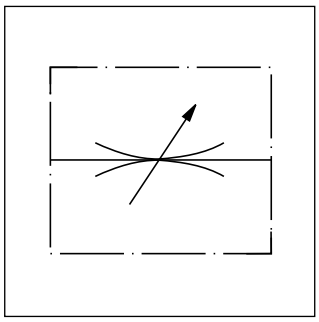

Δp/Q curves

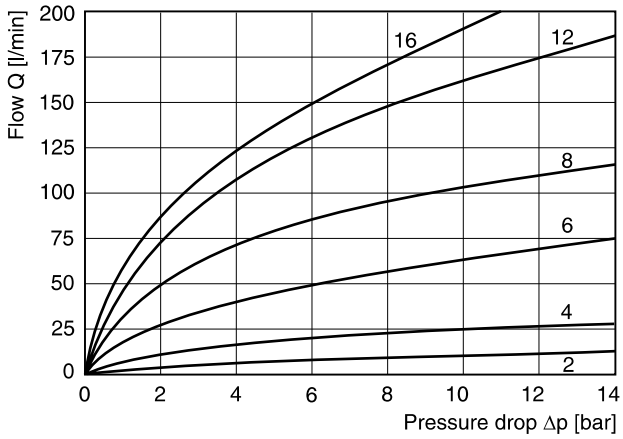

All characteristic curves measured with HLP46 at 50 °C.

$$\text{Flow rate Q [l/min]} = Kv \cdot \sqrt{\frac{\Delta p}{\gamma}}$$

Kv	from the table
Δp [bar]	
γ [kg/dm³]	= specific weight of the medium
(γ for mineral oil	= 0.85 - 0.9)

Ordering code

Thread type	Needle valve	Size and design	Body	Needle	Seal
	MV				

Code	Thread
omit	NPTF
9	**BSPP**

Straight way valve code	Size	Angle valve code
200	**1/8**	**261**
400	**1/4**	**461**
600	**3/8**	**661**
800	**1/2**	**861**
1200	**3/4**	**1261**
1600	**1**	**—**

[1] Not for models MV 1200/1600 and design „61"
[2] Only for size 400

Code	Needle
omit	**Standard with 30° taper**
2 [2]	Fine due to V-notch
3 [2]	Micro-fine due to rect. slot

Code	Body
S	**Steel**
B [1]	Brass

Code	Seal
omit	**NBR**
V	FPM

Bold letters =
Short-term availability

Technical data

Size	Max. pressure [bar] steel	Max. pressure [bar] brass	Flow [l/min] Δp 10 bar	Max. cross.sect. [cm²] Δp 10 bar	Kv factor valve open	Weight [kg]
200	350	140	11	0.07	3.5	0.13
400	350	140	25	0.14	6.3	0.31
600	350	140	65	0.37	18.5	0.54
800	350	140	105	0.55	27.5	0.95
1200	350	–	160	0.90	45.7	1.58
1600	210	–	190	1.10	54.6	1.9
Size and needle type						
200-2			7			
200-3			2			
400-2			11			

MV-9MV UK.indd CM 29.08.13

MV*00 valve with connecting thread in-line

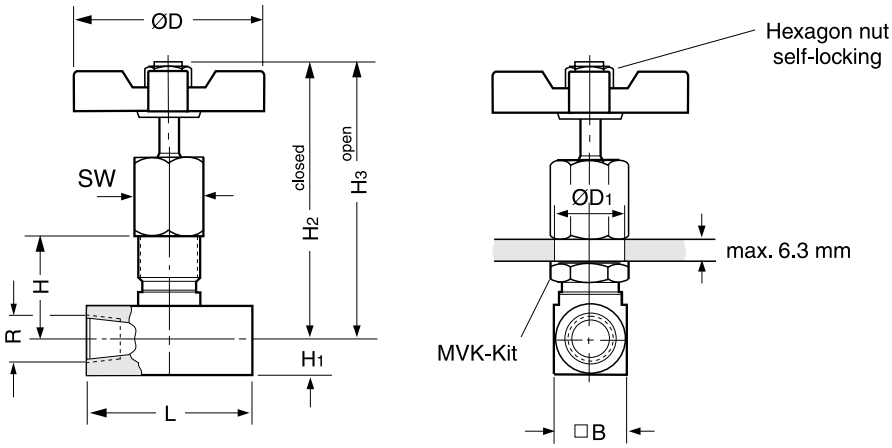

Size	R*	H	H3	H2	H1	B	ØD1	L	ØD	SW	MVK sets
2	1/8	24	69	64	8	16	15	38	45	15.7	MVK 2
4	1/4	33	86	81	10.5	21	20	51	51	22.1	MVK 4
6	3/8	38	108	100	13	26	23	64	64	25.4	MVK 6
8	1/2	51	130	117	16	32	29	67	83	31.8	MVK 8
12	3/4	54	142	128	19	38	36	83	98	41.2	MVK 12
16	1	60	147	133	22.5	45	36	108	98	41.2	MVK 16

MV*61 angle valve with connections at 90° angle

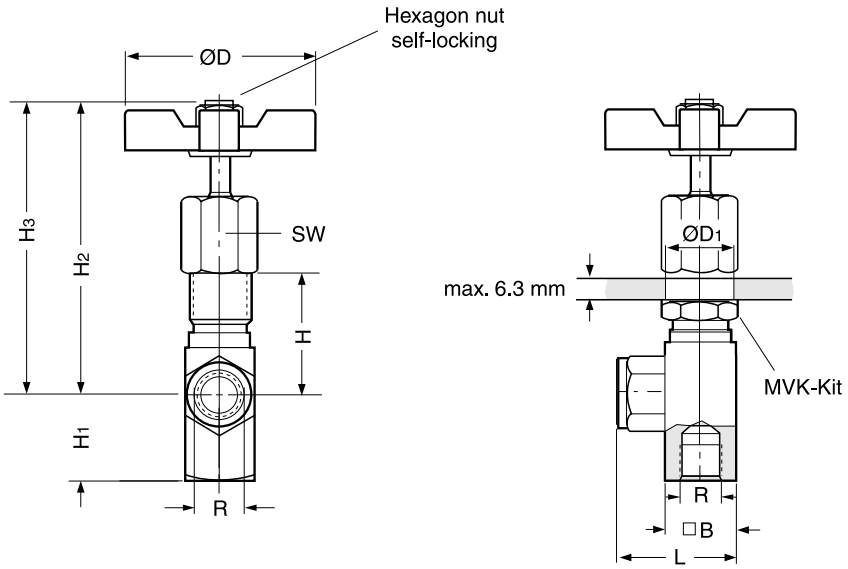

Size	R*	H	H3	H2	H1	B	ØD1	L	ØD	SW
2	1/8	27	72	67	20.6	16	15	27	45	15.7
4	1/4	36	90	85	27.7	21	20	38	51	22.1
6	3/8	42	111	103	34.8	26	23	45	64	25.4
8	1/2	55	134	121	42.7	32	29	53	83	31.8
12	3/4	59	147	133	41.1	38	36	64	98	41.2

* Pipe thread G or NPTF

Manatrol stop and throttle valves with 2-stage needle cone. Fine adjustment for the first stage can be achieved with 3 rotations of the adjustment knob. The second stage with normal throttle characteristics is achieved with 3 further rotations. A cylindrical needle with a rectangular slot is provided to reduce the viscosity effect for sizes 200 up to 600. The flow is dependent on pressure and viscosity.

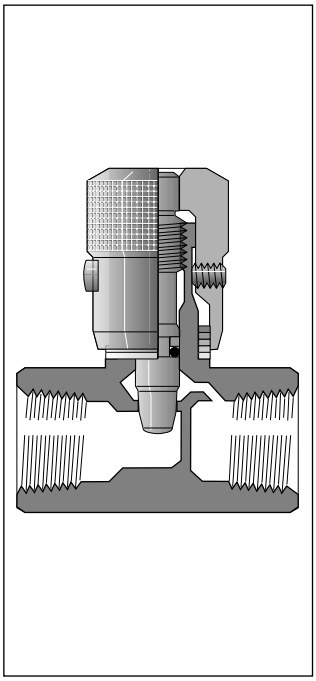

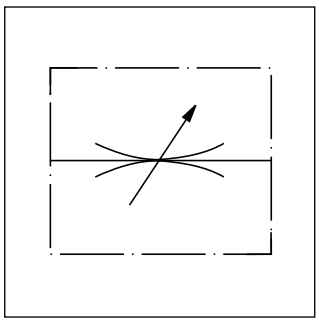

$$\text{Flow rate Q [l/min]} = Kv \cdot \sqrt{\frac{\Delta p}{\gamma}}$$

Kv	from the table
Δp [bar]	
γ [kg/dm³]	= specific weight of the medium
(γ for mineral oil	= 0.85 - 0.9)

Specifications

Return check poppet Nominal cracking pressure	0.4 bar
Operating temperature	-40 °C to +121 °C

Ordering code

	N					
Thread type	**Needle valve**	**Thread size**	**Body**	**Needle**	**Clamping screw**	**Seal**

Code	Thread
omit	NPTF
9	**BSPP**

Code	Size
200	**1/8**
400	**1/4**
600	**3/8**
800	**1/2**
1200	**3/4**
1600	1

Code	Body
S	**Steel**
B	Brass

Code	Seal
omit	**NBR**
V	FPM

Code	Clamping screw
omit	**Hexagon socket**
F	With knurled knob
T	Tamper-proof

Code	Needle
omit	**Standard 2-stage needle**
4 [1)]	Micro-fine hollow needle with slot

Bold letters =
Short-term availability

[1)] Only for sizes 200 to 600

10

Technical data (only for standard 2 stage needle)

Size	Pressure [bar]		Flow [l/min]	Max. cross section	Kv factor valve	Weight [kg]
	Steel	Brass				
200	350	140	11	0.066	3.3	0.15
400	350	140	25	0.13	6.3	0.22
600	350	140	40	0.22	11.2	0.6
800	350	140	50	0.28	13.9	0.63
1200	350	140	120	0.70	35.4	1.04
1600	210	35	250	1.48	75	2.13

N-9N UK.indd CM 29.08.13

p/Q curves

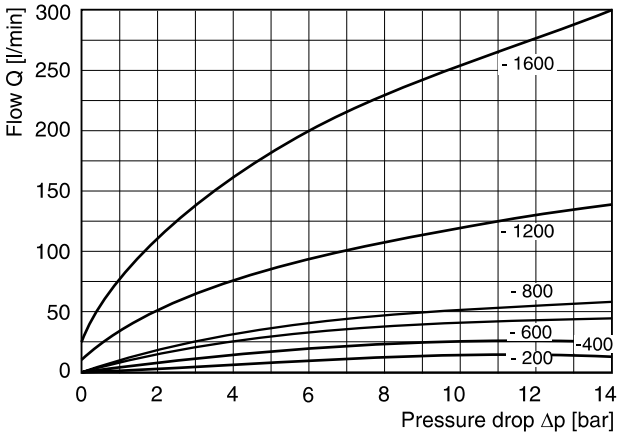

All characteristic curves measured with HLP46 at 50 °C.

Dimensions

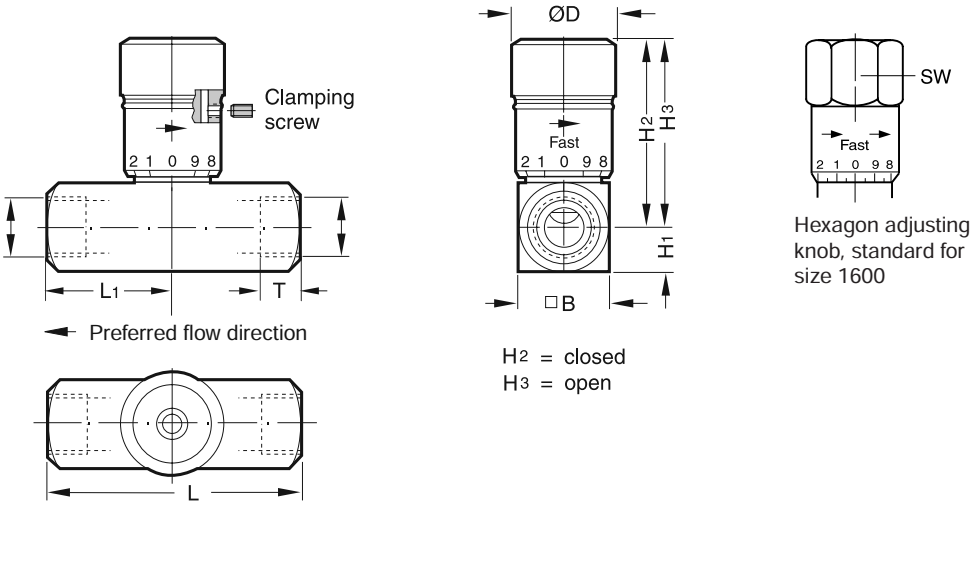

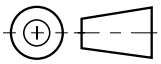

Size	R* Threads	H3	H2	H1	B	L1	L	ØD	SW
200	⅛	39	35	8	16	16	38	19	–
400	¼	46	40	10.5	21	25	51	21	–
600	⅜	55	49	13	26	32	64	25	–
800	½	69	61	16	32	33	67	30	–
1200	¾	86	71	19	38	41	83	35	–
1600	1	124	107	22.5	45	54	108	–	47.8

* G or NPTF

Manatrol throttle check valves of series F with fine adjustment of the flow rate for a defined flow direction. The built-in check valve allows free flow in the counter direction with low flow resistance. A 2-stage needle provides very exact setting of smaller flow rates with the first three rotations of the adjustment knob. After 3 more rotations, the valve is completely open. The valve setting can be locked with the locking screw.

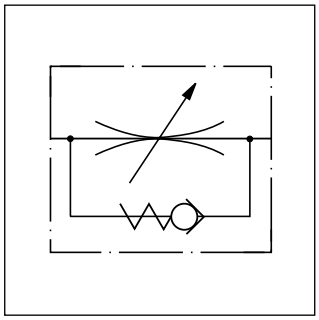

$$\text{Flow rate } Q\ [l/min] = Kv \cdot \sqrt{\frac{\Delta p}{\gamma}}$$

Kv	from the table
Δp [bar]	
γ [kg/dm³]	= specific weight of the medium
(γ for mineral oil	= 0.85 - 0.9)

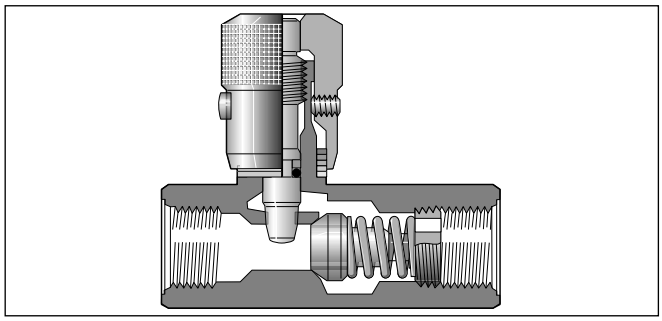

Specifications

Return check poppet Nominal cracking pressure	0.4 bar
Operating temperature	-40 °C to +121 °C

Ordering code

	F					
Thread type	**Throttle check valve**	**Thread size**	**Body**	**Needle**	**Clamping screw**	**Seal**

Code	Thread
omit	NPTF
9	**BSPP**

Code	Size
200	**1/8**
400	**1/4**
600	**3/8**
800	**1/2**
1200	**3/4**
1600	**1**
2000	1¼
2400	1½
3200	2

Code	Seal
omit	**NBR**
V	FPM

Code	Clamping screw
omit	**Hexagon socket**
F	With knurled knob
T	Tamper-proof

Code	Needle
omit	**Standard 2-stage needle**
4 [2]	Micro-fine hollow needle with slot

Code	Body
S	**Steel**
B [1]	Brass

[1] Only for sizes 200 to 1600
[2] Only for sizes 200 to 600

Bold letters =
Short-term availability

Technical data

Size	Pressure [bar]		Max. flow [l/min Δp10bar]	Throttle surface [cm²]	Throttle v. open Kv factor	Weight [kg]	
	Steel	Brass				Steel	Brass
200	350	140	11	0.066	3.3	0.13	0.13
400	350	140	25	0.13	6.3	0.23	0.23
600	350	140	40	0.22	11.2	0.31	0.31
800	350	140	50	0.28	14	0.67	0.68
1200	210	140	120	0.70	35.4	1.17	1.18
1600	210	35	250	1.48	75	2.31	2.32
2000	210	–	250	1.48	75	3.67	–
2400	210	–	250	1.48	75	4.62	–
3200	210	–	250	1.48	75	7.78	–

F-9F UK.indd CM 29.08.13

Controlled flow vs. pressure drop needle fully open

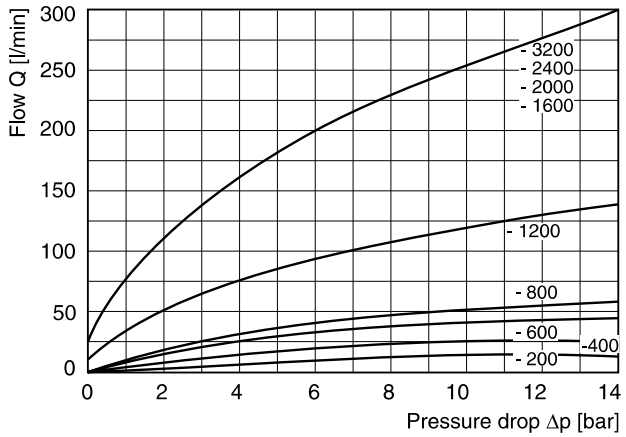

Free flow vs. pressure drop needle fully open

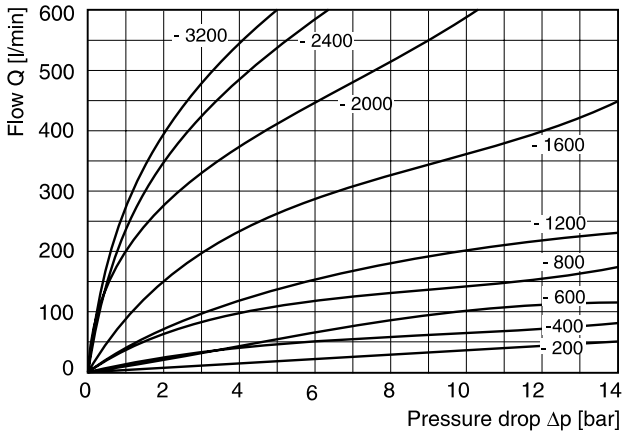

All characteristic curves measured with HLP46 at 50 °C.

Dimensions

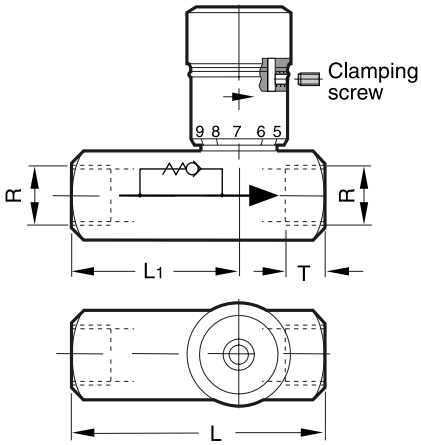

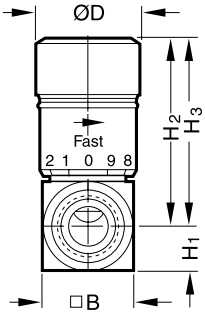

H_2 = closed
H_3 = open

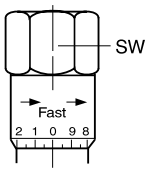

Hexagon adjusting knob, standard for sizes 1600 to 3200

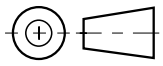

Size	R*	H3	H2	H1	B	L1	L	ØD	SW	T
200	⅛	39	35	8	16	36	51	19	-	9
400	¼	46	40	10.5	21	43	67	21	-	13
600	⅜	55	49	13	26	45	70	25	-	13
800	½	69	61	16	32	57	87	30	-	16
1200	¾	86	71	19	38	65	99	35	-	17
1600	1	124	107	22.5	45	83	127	-	47.8	20
2000	1 ¼	130	114	29	58	99	143	-	-	21.5
2400	1 ½	137	120	35	70	114	143	-	-	23.5
3200	2	146	130	44.5	89	134	165	-	-	25

* Pipe thread G or NPTF

Manatrol 2 way flow control valves for pressure compensated regulation of the flow rate. As a consequence of pressure changes, the set value can vary by ± 5 % within the tolerance range. Viscosity changes have the same effect and must to be observed.

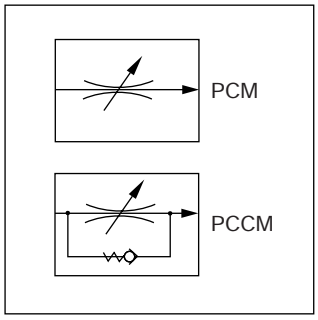

Technical data

Size	Max. press. [bar]	Flow control		Check valve		Weight [kg]
		Q* [l/min]	Δp [bar]	Q_{max} [l/min]	Δp [bar]	
400	210	1 - 10	7	20	3	0.82
600	210	2 - 25	7	30	3	1.05
800	210	6 - 60	11	75	8	1.68
1200	210	10 - 100	11	130	8	3.64
1600	210	19 - 190	11	250	10	6.59

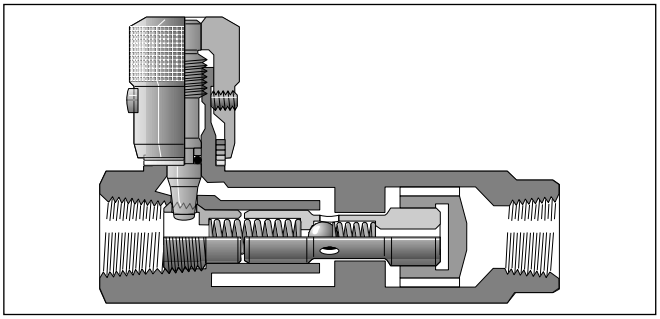

Ordering code

	PC		**M**		**S**			
Thread type	**Press. comp. flow control valve**	**Design**		**Thread size**	**Steel body**	**Clamping screw**	**Seal**	**Design series** (not required for ordering)

Code	Thread
omit	NPTF
9	**BSPP**

Code	Design
omit	**Without check valve**
C	With check valve

Code	Size
400	**1/4**
600	**3/8**
800	**1/2**
1200	**3/4**
1600	**1**

Code	Seal
omit	**NBR**
V	FPM

Code	Clamping screw
omit	**Hexagon socket**
F	With knurled knob
T [1)]	Tamper-proof

Bold letters =
Short-term availability

* Min. and max. flow rate
[1)] Not available above size 1200

Δp/Q curves

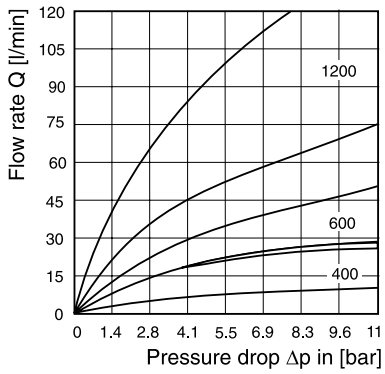

Sizes 400, 600 and 1200: Pressure drop Δp for flow through check valve in range Q_{max} / Q_{min} with each size

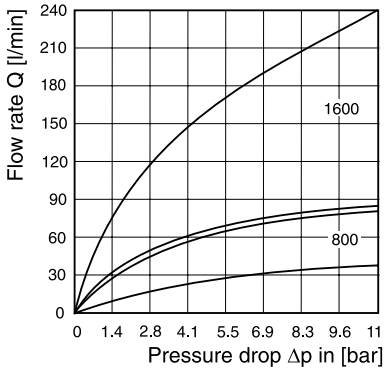

Sizes 800 and 1600: Pressure drop Δp for flow through check valve in range Q_{max} / Q_{min} with each size

Size 400 - 1600 p/Q control characteristic

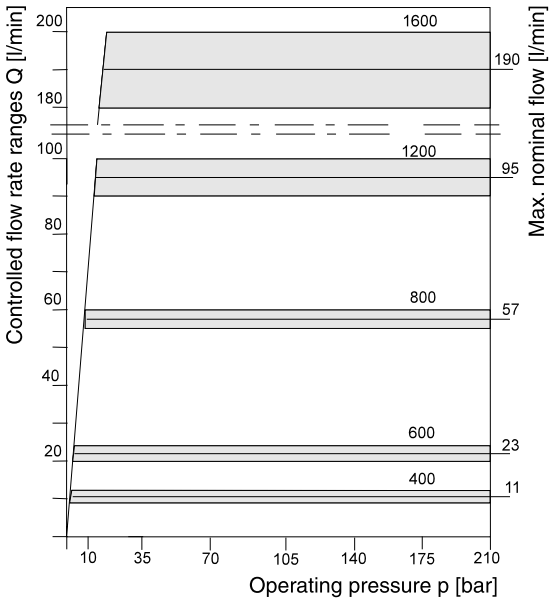

All characteristic curves measured with HLP46 at 50 °C.

Dimensions

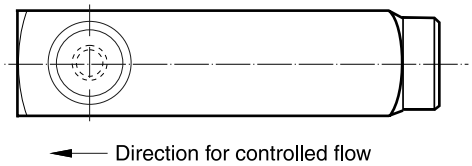

Hexagon adjusting knob, standard for size 1600

H2 = closed
H3 = open

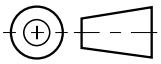

Size	R*	H3	H2	B	L1	B1	L2	ØD	SW
400	¼	69	64	35	16	18	92	21	-
600	⅜	80	74	38	18	19	106	25	-
800	½	103	95	44	22	22	125	30	-
1200	¾	128	116	57	28	29	149	35	-
1600	1	175	158	70	33	35	176	-	47.8

* Pipe thread G or NPTF

PCM-9PCM UK.indd CM 29.08.13

Manatrol check valves of series C for pipe mounting provide free flow in one direction and block flow in the counter direction. Depending on material specification, these valves are suited for use in hydraulic and pneumatic systems.

Specific poppets and poppet guides ensure reliable functional integrity even at high flow rates and/or pulsations.

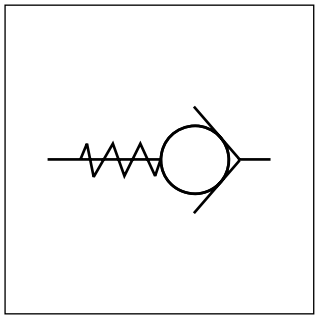

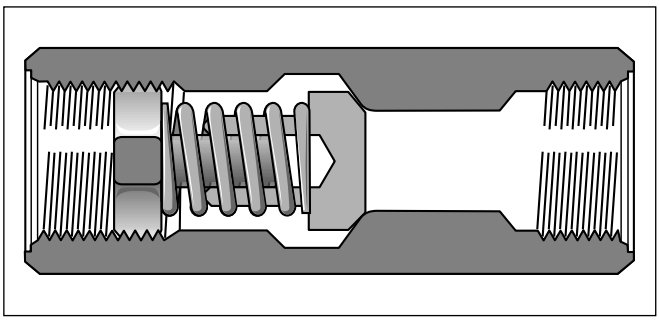

Technical data

Size			200	400	600	800	1200	1600
Max. operating pressure	steel	[bar]	350	350	350	350	350	210
	brass	[bar]	140	140	140	140	140	34
Pressure drop Δp		[bar]	10	10	10	10	1	1
Flow Q		[l/min]	40	65	110	155	112	160

Ordering code

	C			
Thread type	Pipe mounting	Port size	Body	Opening pressure

Code	Thread
omit	NPTF
9	**BSPP**

Code	Size
200	1/8
400	**1/4**
600	**3/8**
800	**1/2**
1200	**3/4**
1600	**1**

Code	Pressure [bar]
omit	**0.35**
65	4.5

Code	Body
S	**Steel**
B	Brass

Bold letters =
Short-term availability

10

C-9C UK.indd CM 29.08.13

Δp/Q performance curves

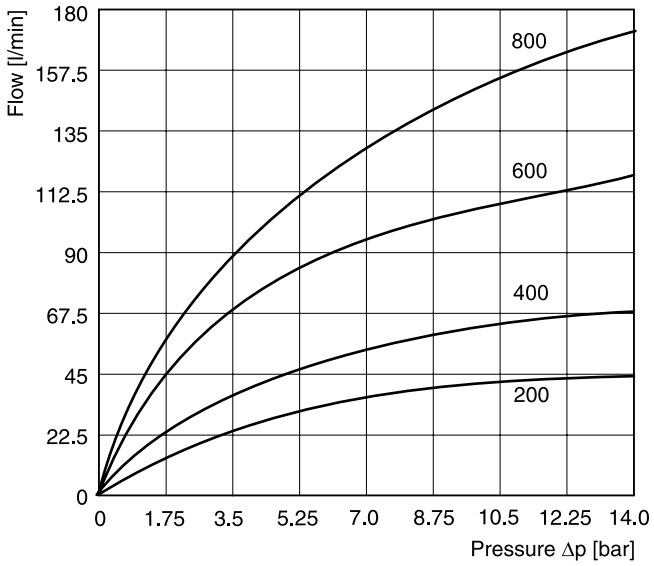

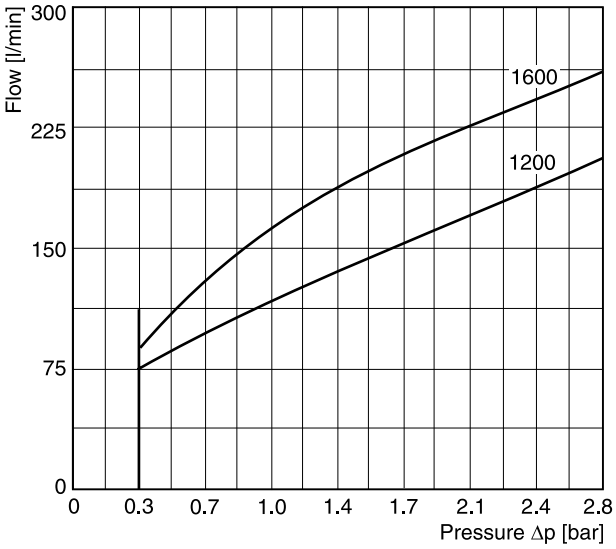

All characteristic curves measured with HLP46 at 50 °C.

Dimensions

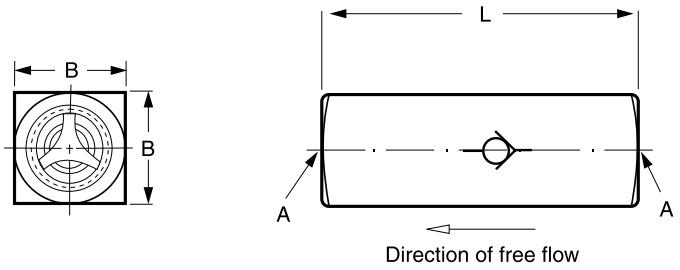

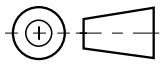

Size	Threaded connection R*		Dimensions [mm]		Weight [kg]
	G thread	NPTF thread	B	L	
C 200	R ⅛"	⅛-27 NPTF	16	51	0.05
C 400	R ¼"	¼-18 NPTF	21	66	0.2
C 600	R ⅜"	⅜-18 NPTF	25	70	0.2
C 800	R ½"	½-14 NPTF	32	87	0.6
C 1200	R ¾"	¾-14 NPTF	38	99	0.9
C 1600	R 1"	1-11-½ NPTF	45	127	1.5

* For alternative thread design, see ordering code.

Pilot operated check valves series CP allow free flow in one direction (A to B).

The counter direction (B to A) is blocked. By applying pilot pressure, the poppet can be lifted from its seat against the pressure in port B. Thus flow in the counter direction is also possible. There are 1 and 2 stage poppets available with pilot ratios of 1 : 5 and 1 : 40, to suit different operating conditions.

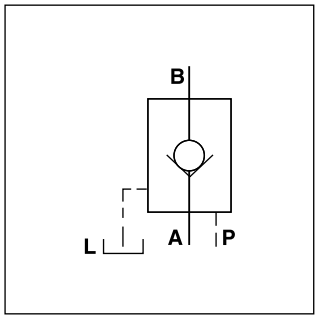

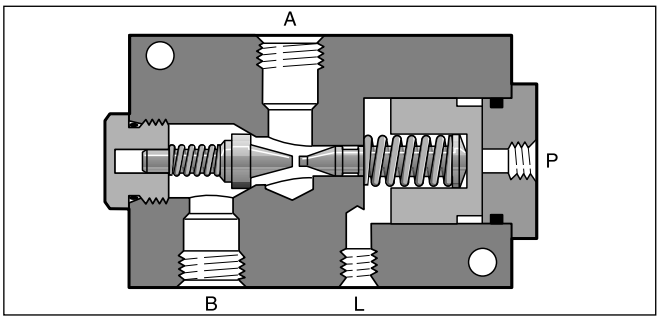

Technical data

Size		600	1200
Max. operating pressure	[bar]	210	210
Max. pilot pressure	[bar]	210	70
Flow Q_{max} at Δp 2.7 bar	[l/min]	30	95
Nominal size		3/8	3/4
Weight	[kg]	4	7

Pilot ratios

Poppet 1 stage

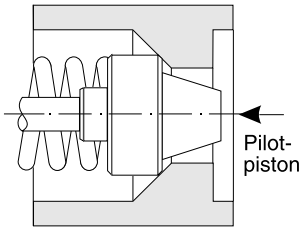

Surface ratio 5 : 1 (pilot spool-poppet surface) for quick response time without decompression.

Poppet 2 stage

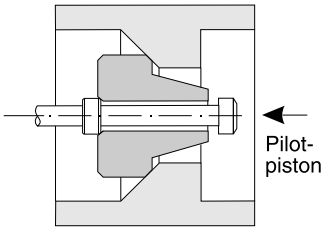

Surface ratio 40 : 1 (pilot spool decompression pin surface) for low shock or oscillation performance from decompression.

Ordering code

	CP		S		M	
Thread type	Check valve, pilot operated	Port size	Steel body	Pilot ratio	Steel poppet	Seal

Code	Thread
omit	NPTF
9	**BSPP**

Code	Size
600	**3/8**
1200	**3/4**

Code	Seal
omit	**NBR**
V	FPM

Code	Pilot ratio	Stage
5	**5 : 1**	**1**
40	40 : 1	2

Bold letters =
Short-term availability

Δp/Q performance curves

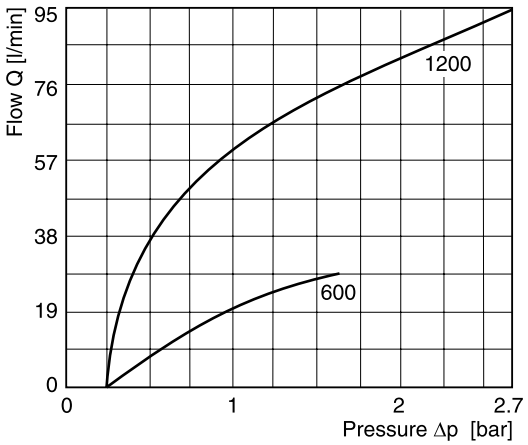

All characteristic curves measured with HLP46 at 50 °C.

Dimensions

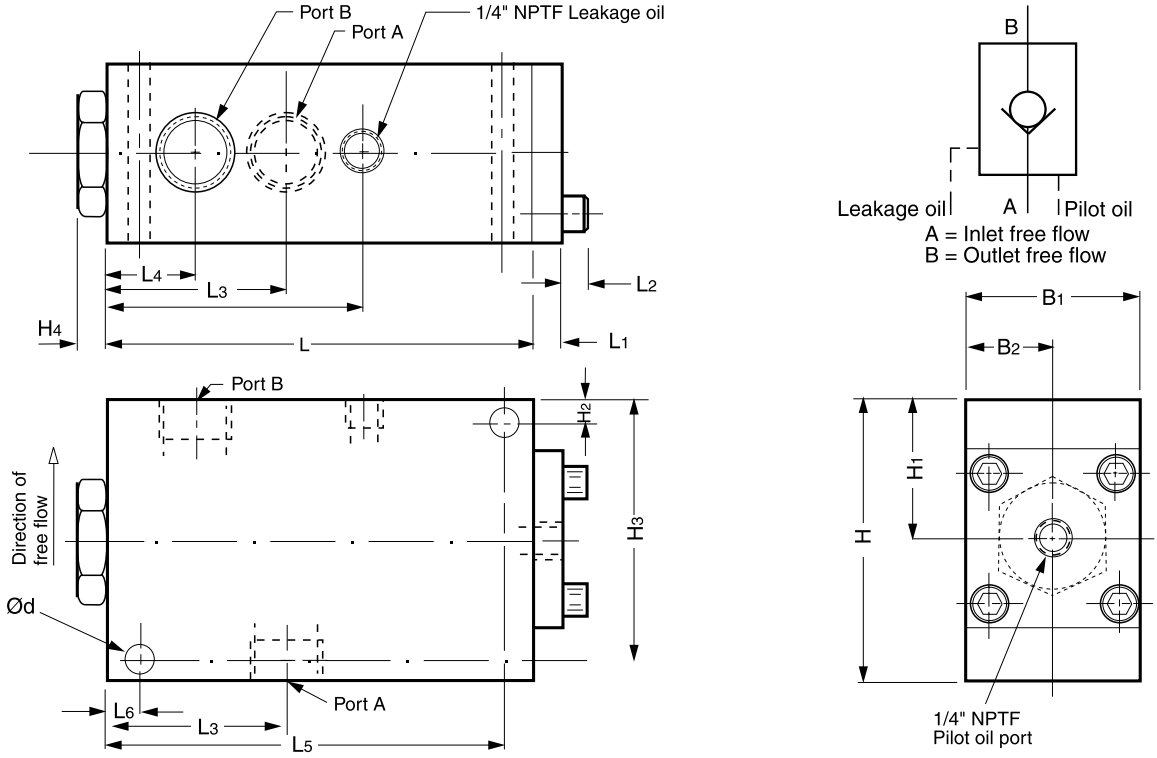

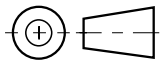

Size	A, B	L_3	B_1	B_2	H_1	H	L_4	L_7	H_4	L	L_1	H_2	H_3	L_6	L_5	Ød	W
9CP600S	G3/8	53.3	50.8	25.4	38.1	76.2	25.4	76.2	10.4	120.7	10.7	9.4	66.5	9.4	111	9.1	-
9CP1200S	G3/4	63.5	63.5	31.8	50.8	101.6	31.8	91.2	10.7	152.4	11.43	11.2	90.4	11.2	141.2	10.7	7.9

Pilot operated check valves series RH allow free flow in one direction (B to A). The counter flow is blocked (A to B). By applying pilot pressure the ball can be lifted from its seat and allow flow from A to B.

Most common use:

- Keeping cylinders leak-free in position, when spool type directional control valves are used
- Return line discharge, when return flow exceeds functional limits of directional control valve at differential cylinders
- As hydraulically activated drain or circulation valve

The valves are available without and with hydraulic pre-discharging.

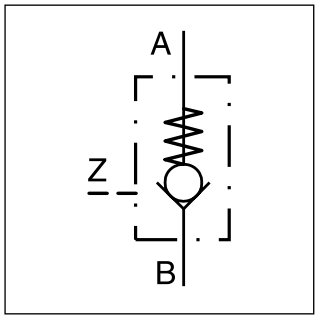

Without pre-discharging

These valves have a ball as valve element, which quickly enables the full flow cross-section proportionally during pilot operation. A metering position in the pilot port dampens the control movement of the pilot spool so that pressure shocks (unloading shocks) are mostly suppressed.

With pre-discharging

For valves with pre-discharging a spherical polished valve spool (seat valve function) is built-in instead of a ball. The additional check valve achieves a pre-opening which provides shock-free unloading of the fluid, especially at high working pressure and large volumes.

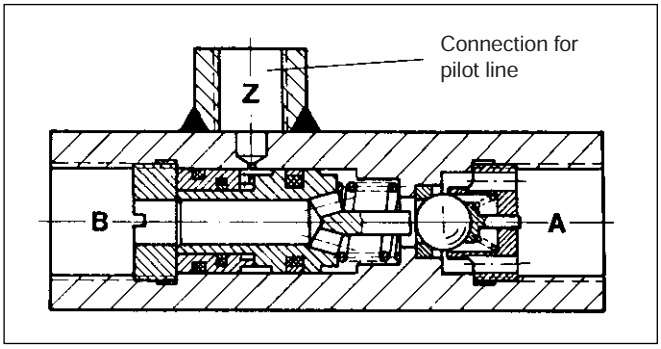

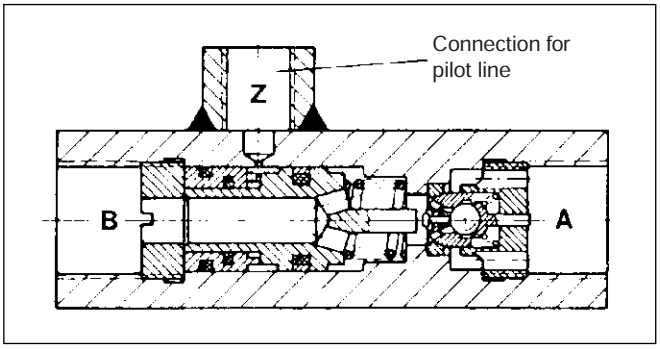

Ordering code

RH		
Check valve, hydr. pilot operated	Flow	Pre-discharging

Code	Flow [l/min]
1	15
2	**35**
3	**55**
4	100

Code	Pre-discharging
V [1]	**with**
omit	**without**

Bold letters =
Short-term availability

[1] Only for sizes 3 and 4

Technical data

Code	RH	1	2	3 / 3V	4 / 4V
Max. operating pressure	[bar]	700	700	500	500
Flow approx.	[l/min]	15	35	55	100
Pilot flow volume	[cm³]	0.15	0.22	0.4	1
Pipe connections DIN ISO 228/1 A, B		G ¼	G ⅜	G ½	G ¾
Pipe connections DIN ISO 228/1 Z		G ¼	G ¼	G ¼	G ¼
Weight	[kg]	0.4	0.4	0.6	1.3
Mounting		Freely suspended in the pipeline			
Mounting position		unrestricted			
Fluid		Hydraulic oil 10...68 mm²/s (ISO VG 10 to 68 as per DIN 51 519)			
Viscosity recommended	[cSt]/[mm²/s]	10...500			
Viscosity permitted	[cSt]/[mm²/s]	4...500			
Temperatures	[°C]	Fluid and ambient: -20...+80; observe viscosity range!			
$MTTF_D$ value	[years]	150			

Pilot pressure p_{St} for pilot operation of the main valve (p_B = 0 bar)

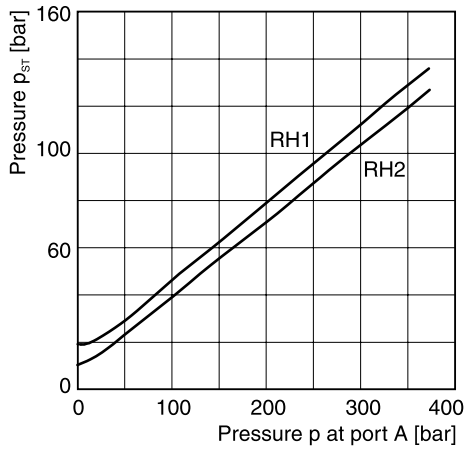

Pilot pressure p_{St} for pilot operation of pre-discharging

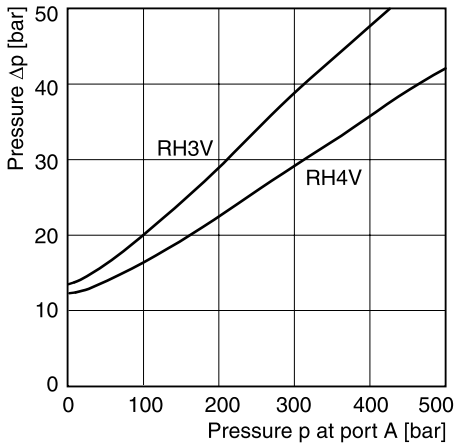

for keeping open		
p_{St}		$p_B + \Delta p + k$
p_B	[bar]	pressure on side B
Δp	[bar]	flow resistance A to B as per $\Delta p/Q$ performance curve
k		10 at RH 1 and RH 2 7 at RH 3 V 8 at RH 4 V

10

Performance $\Delta p/Q$ curves (valid for flow polarity B to A and pilot operated direction A to B)

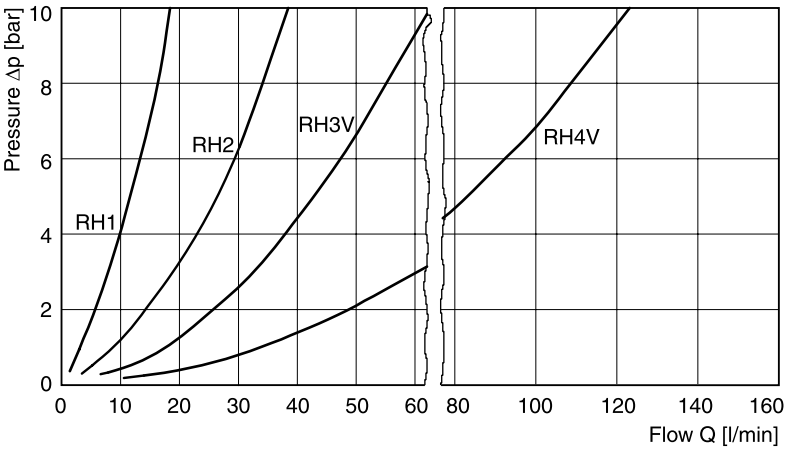

Opening pressure B to A 0.2...0.3 bar

Oil viscosity during the measurement, 60 mm²/s

For viscosities over approx. 500 mm²/s, a strong Δp-increase is to be expected for smaller types (RH1...RH3).

RH UK.indd CM 29.08.13

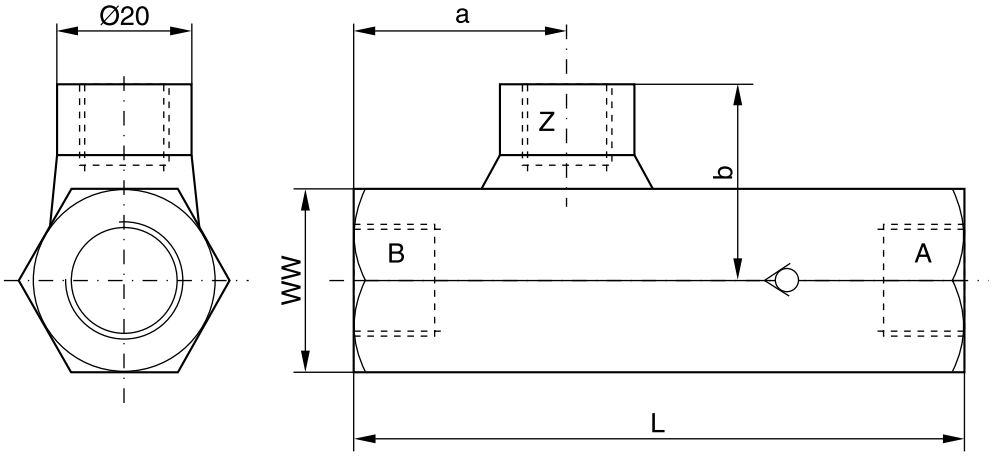

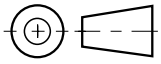

Type	Port [1]		L	a	b	SW
	A, B	Z				
RH 1	G ¼	G ¼	84	31.5	27	24
RH 2	G ⅜	G ¼	90	32	28.5	27
RH 3 V	G ½	G ¼	100	36.5	31	32
RH 4 V	G ¾	G ¼	126	45	35.5	41

[1] As per DIN 228/1, suitable for pipe connections with thread studs form B as per DIN 3852 page 2.

Description	Threaded cable joint	Body colour coding	Figures switching	Order no.
Plug DIN 43650, design type AF, protection class IP 65 Voltages up to 250 V	PG 9	black, B grey, A	Fig. 1	**5001710** **5001711**
	PG11	black, B grey, A	Fig. 1	**5001716** **5001717**

Fig. 1

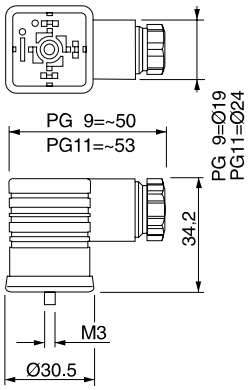

Other plugs on request.